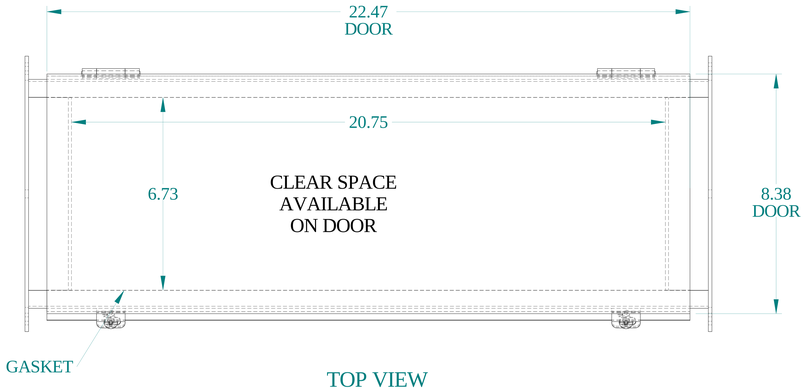

TOP VIEW

BACK VIEW

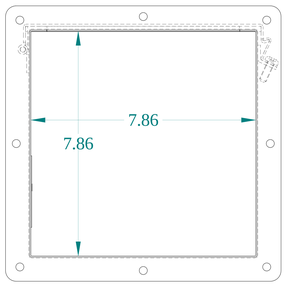

SIDE VIEW

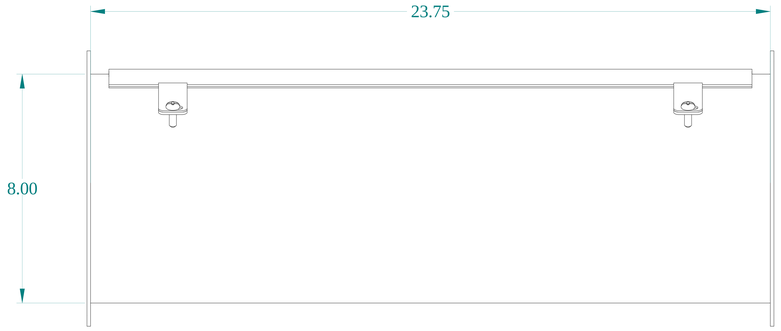

FRONT VIEW

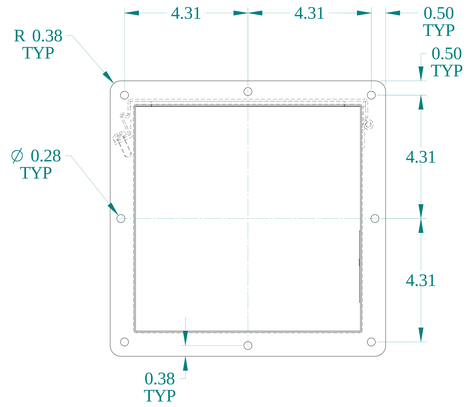

SIDE VIEW

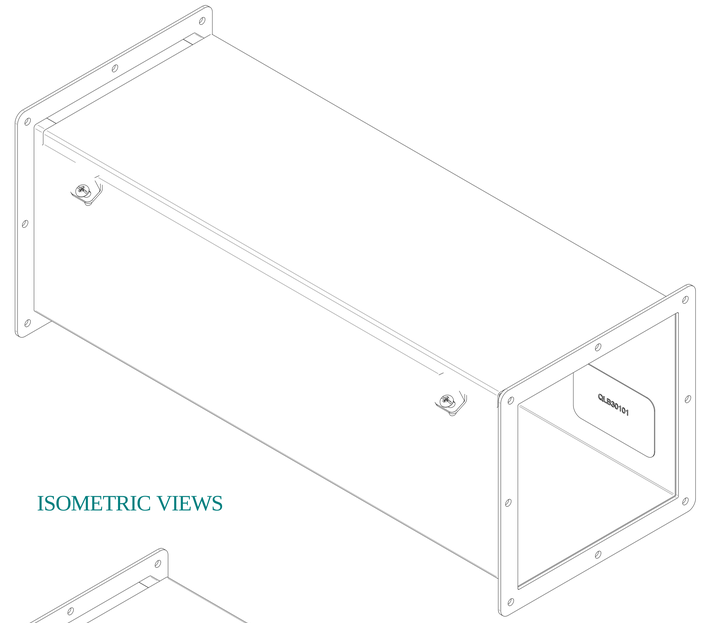

ISOMETRIC VIEWS

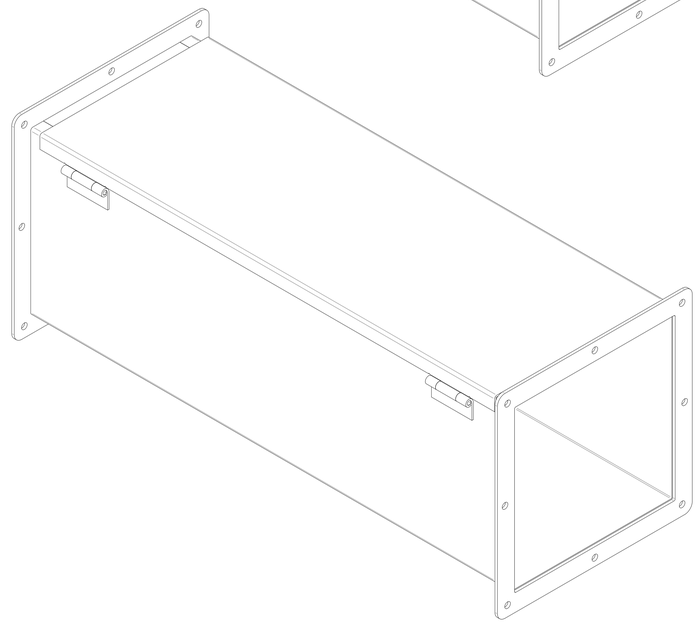

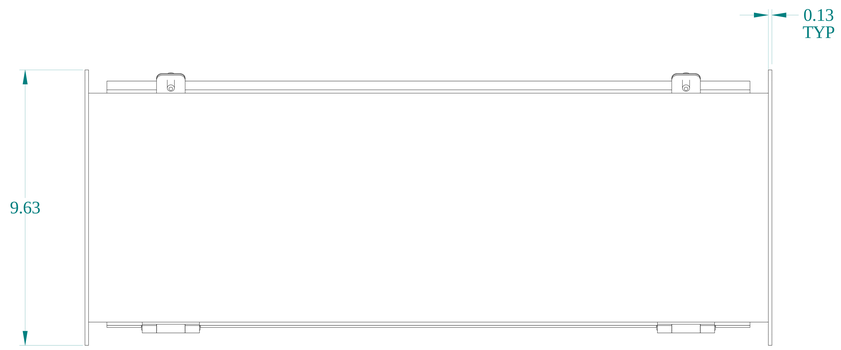

BOTTOM VIEW

HAMMOND MANUFACTURING®

www.hammondmfg.com

Data subject to change without notice.

Part # : 1487E24SS	Date : Aug. 29, 2025

Link:www.hammfg.com/1487E24SS