TOP VIEW

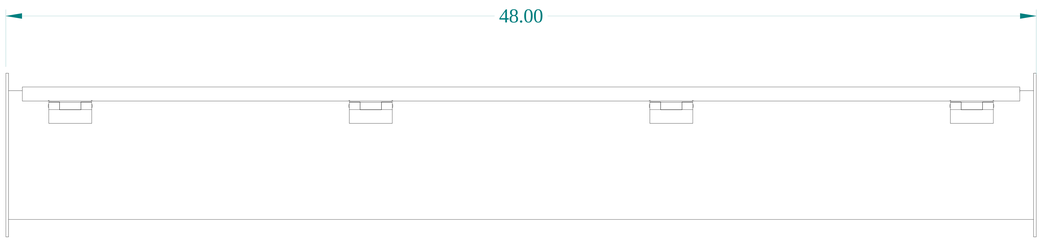

BACK VIEW

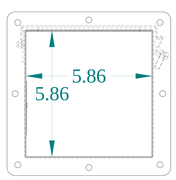

SIDE VIEW

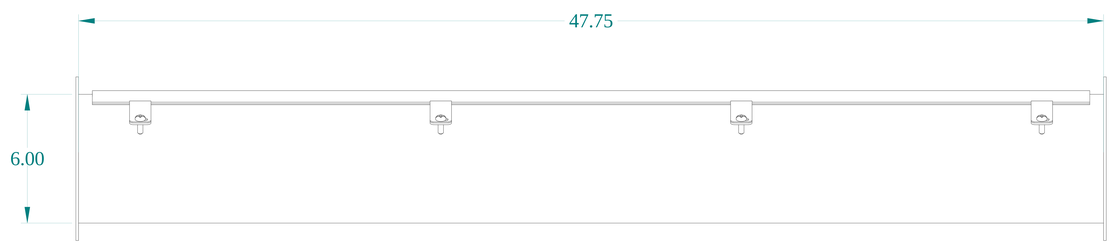

FRONT VIEW

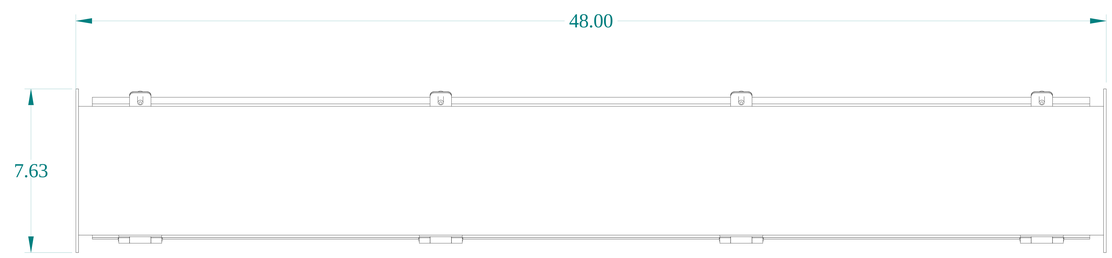

BOTTOM VIEW

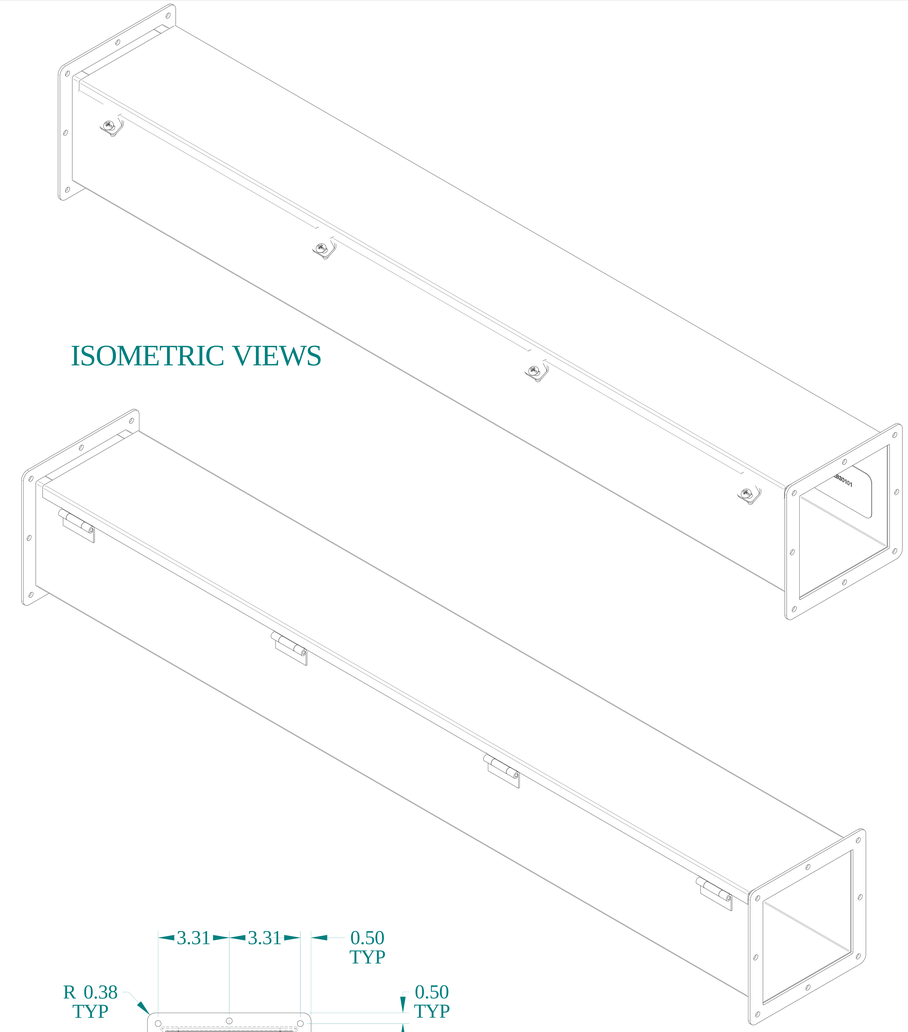

ISOMETRIC VIEWS

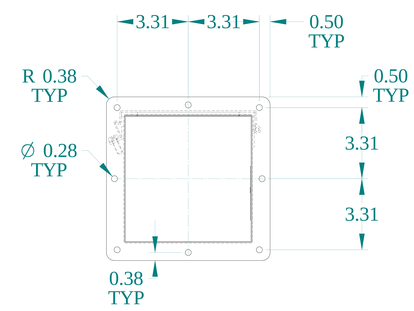

SIDE VIEW

HAMMOND MANUFACTURING®

www.hammondmfg.com

Data subject to change without notice.

Part # : 1487D48SS	Date : Aug. 29, 2025

Link:www.hammfg.com/1487D48SS