TOP VIEW

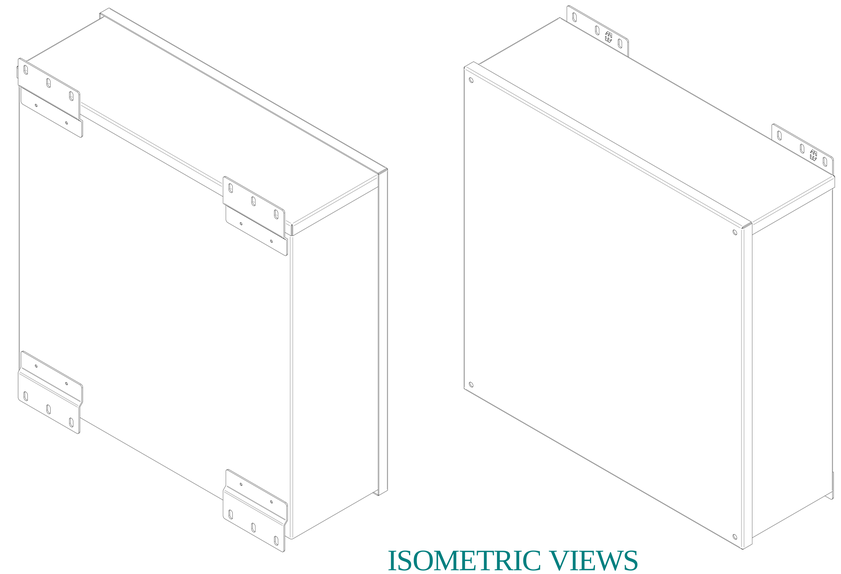

ISOMETRIC VIEWS

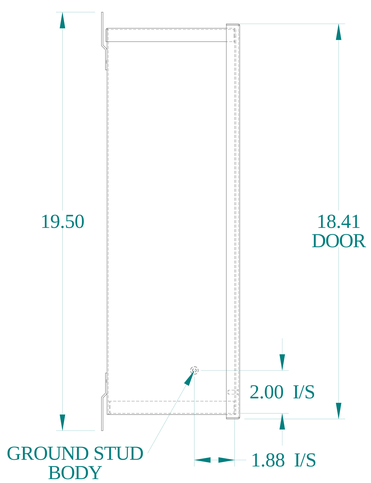


SIDE VIEW

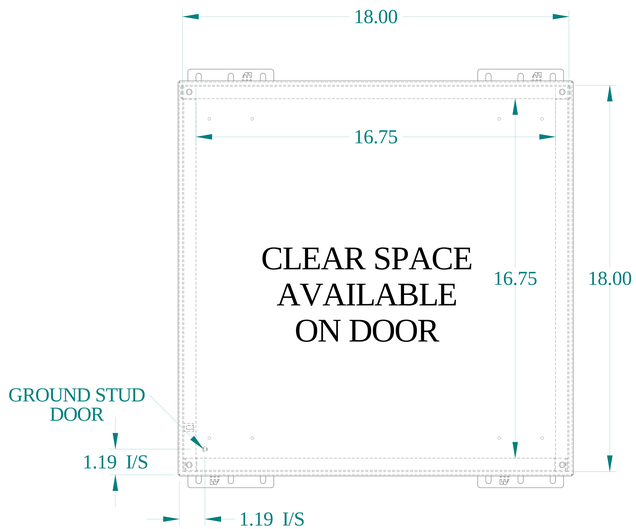


FRONT VIEW

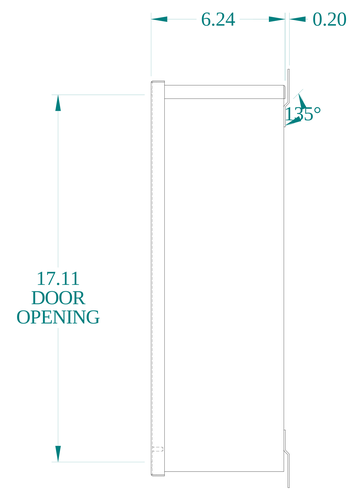


SIDE VIEW

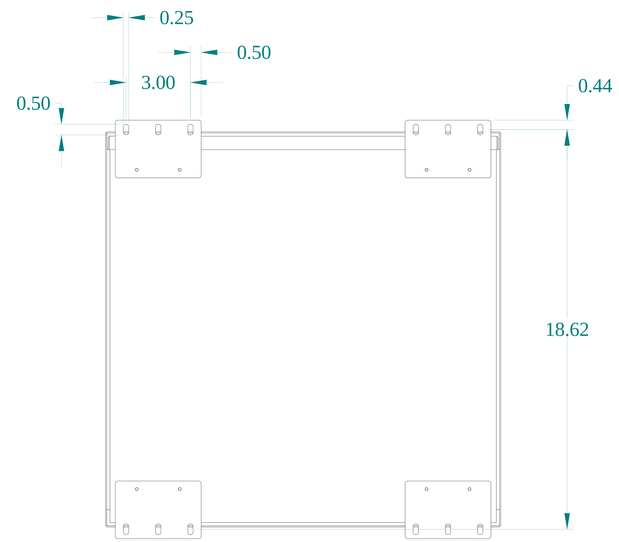


BACK VIEW

BOTTOM VIEW

HAMMOND MANUFACTURING®

www.hammondmfg.com

Data subject to change without notice.

| | |
|---|---|
| Part # : C3R18186ESCNK | Date : Dec. 12, 2024 |

Link:www.hammfg.com/C3R18186ESCNK