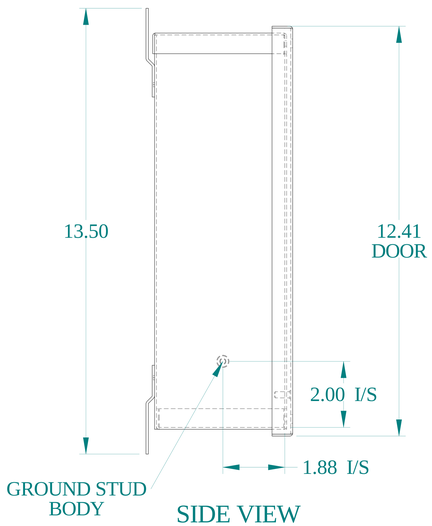

SIDE VIEW

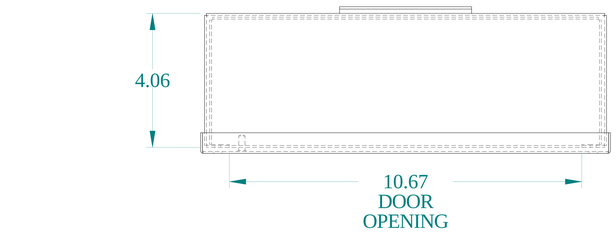

TOP VIEW

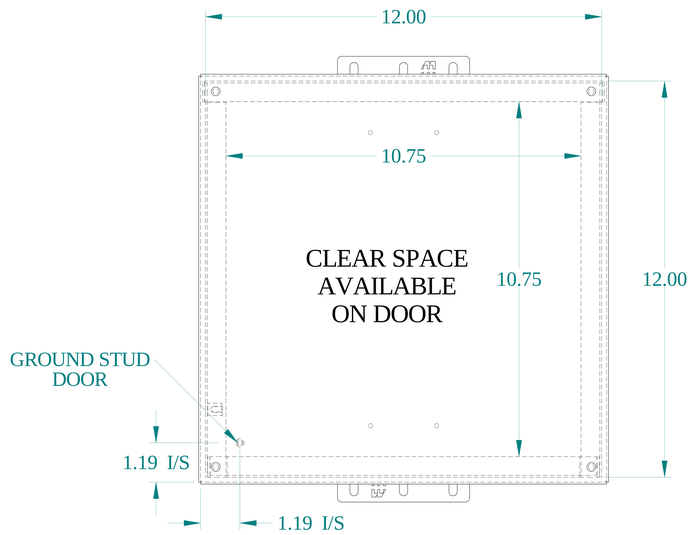

FRONT VIEW

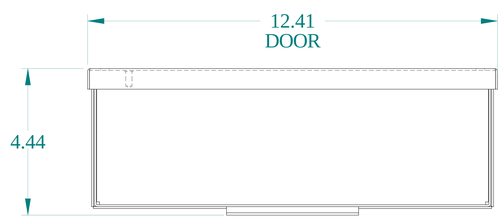

BOTTOM VIEW

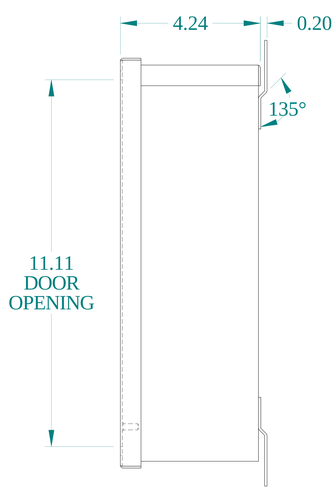

SIDE VIEW

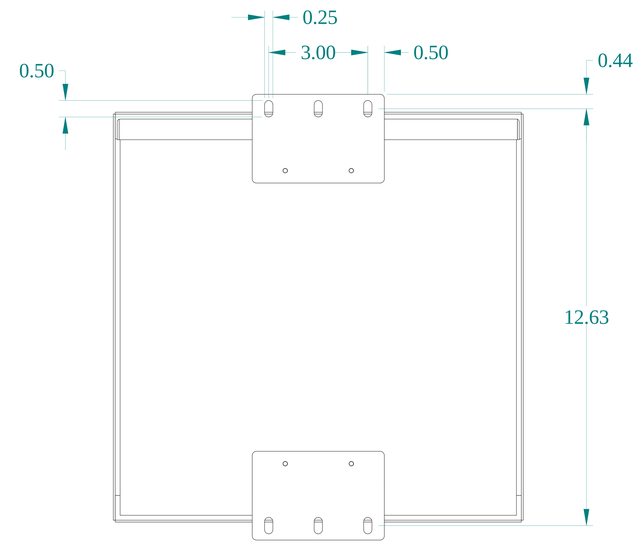

BACK VIEW

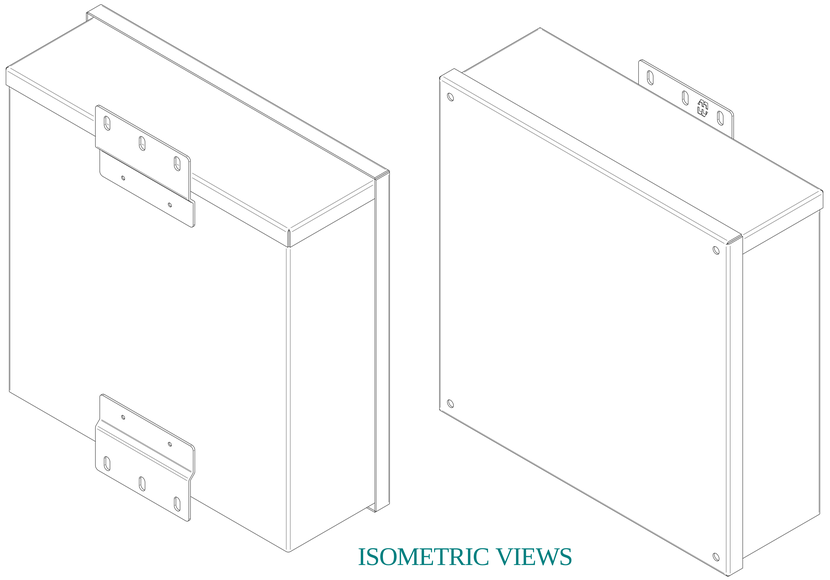

ISOMETRIC VIEWS

HAMMOND MANUFACTURING®

www.hammondmfg.com

Data subject to change without notice.

Part # : C3R12124ESCNK	Date : Dec. 12, 2024

Link:www.hammfg.com/C3R12124ESCNK