TOP VIEW

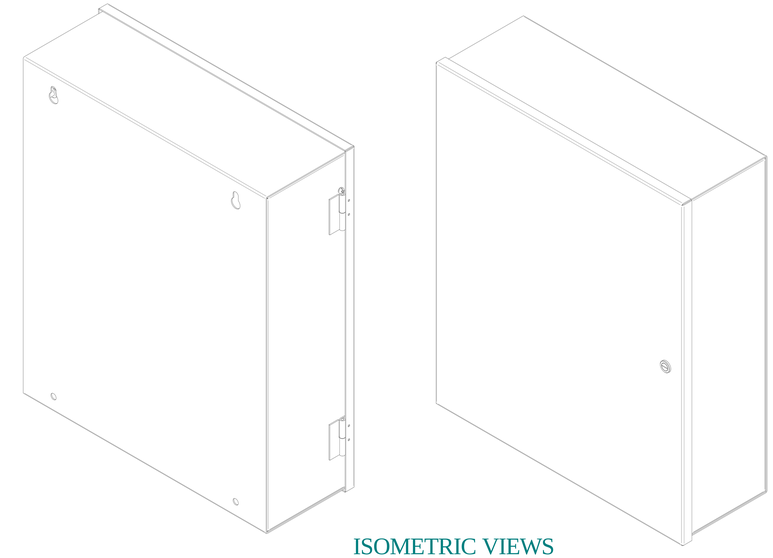

ISOMETRIC VIEWS

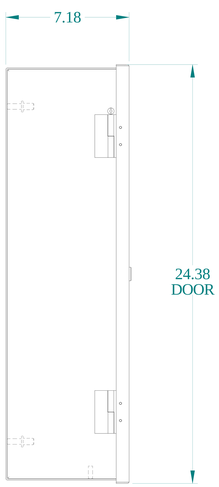

SIDE VIEW

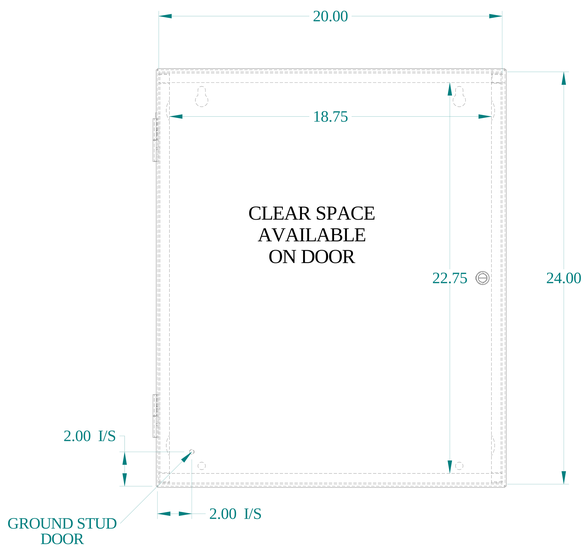

TOP VIEW

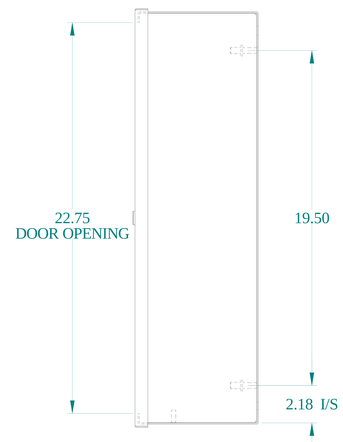

SIDE VIEW

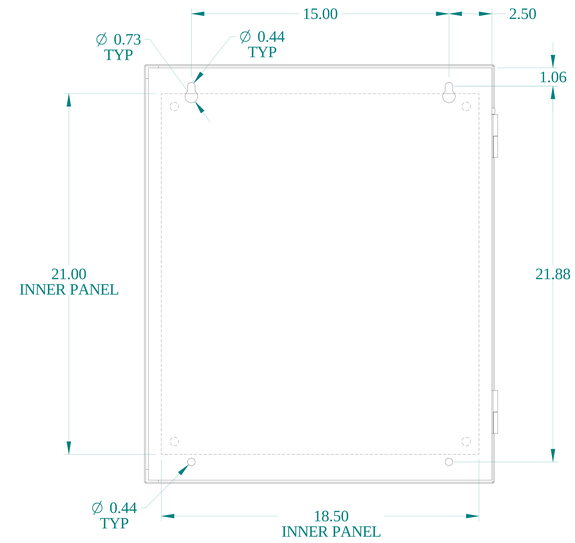

BACK VIEW

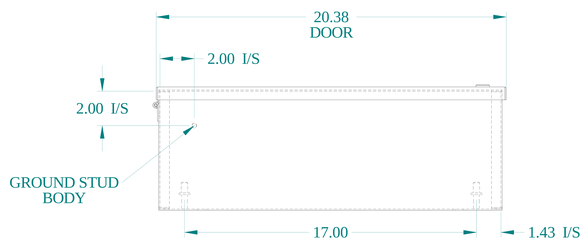

BOTTOM VIEW

HAMMOND MANUFACTURING®

www.hammondmfg.com

Data subject to change without notice.

Part # : N1A24207	Date : Jun. 20, 2025

Link:www.hammfg.com/N1A24207