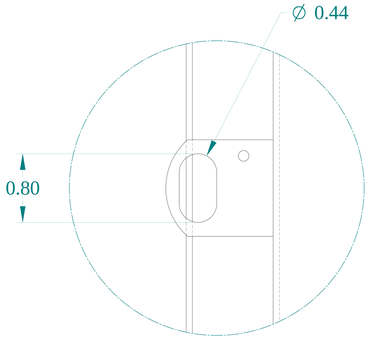


DETAIL Z

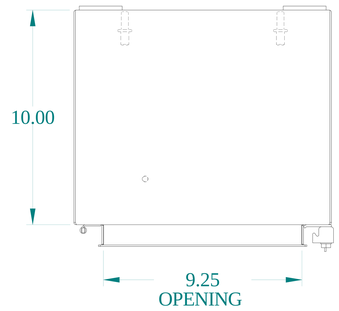


TOP VIEW
(DOOR REMOVED)

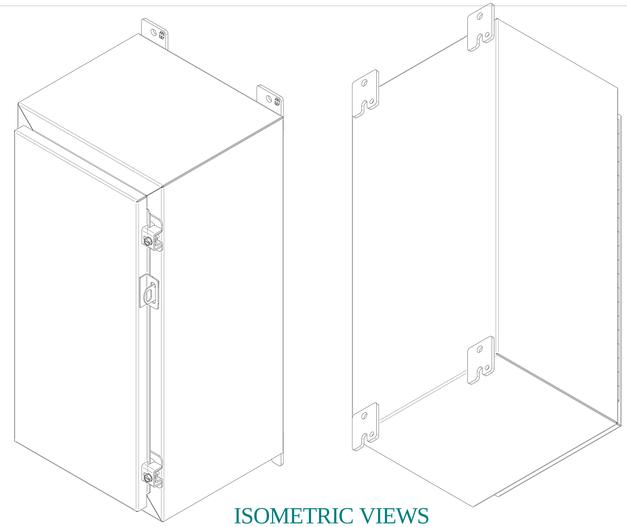

ISOMETRIC VIEWS

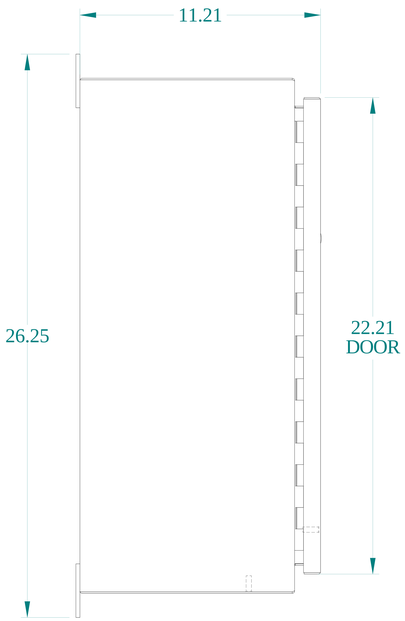


SIDE VIEW

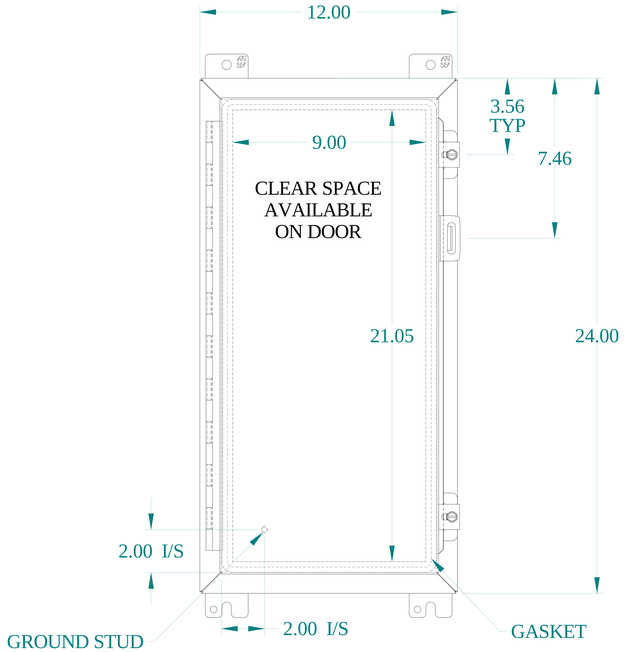


FRONT VIEW

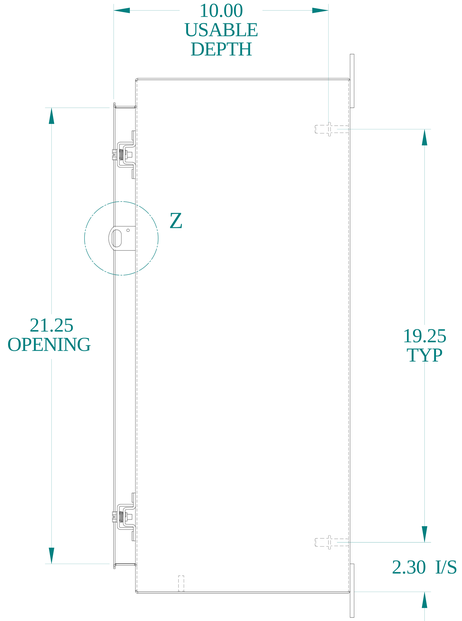


SIDE VIEW
(DOOR REMOVED)

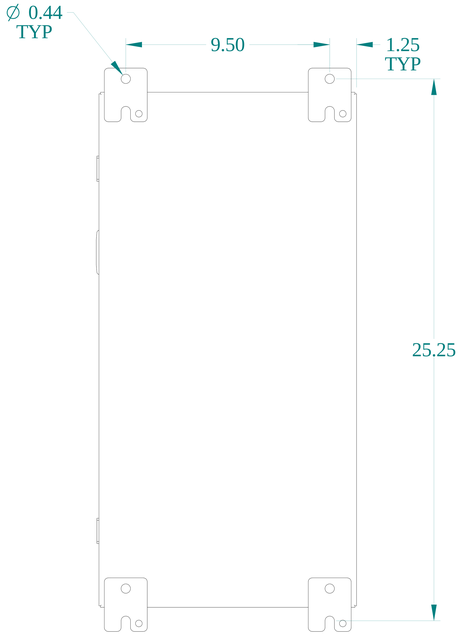


BACK VIEW

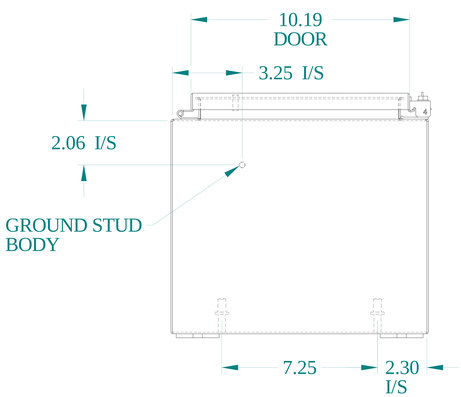


BOTTOM VIEW

HAMMOND MANUFACTURING®

www.hammondmfg.com

Data subject to change without notice.

| | |
|---|---|
| Part # : 1418AR10LP | Date : Feb. 20, 2026 |

Link:www.hammfg.com/1418AR10LP