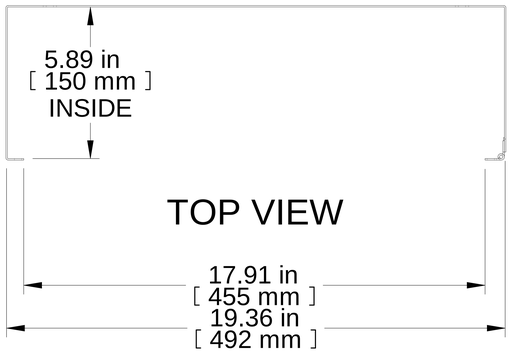

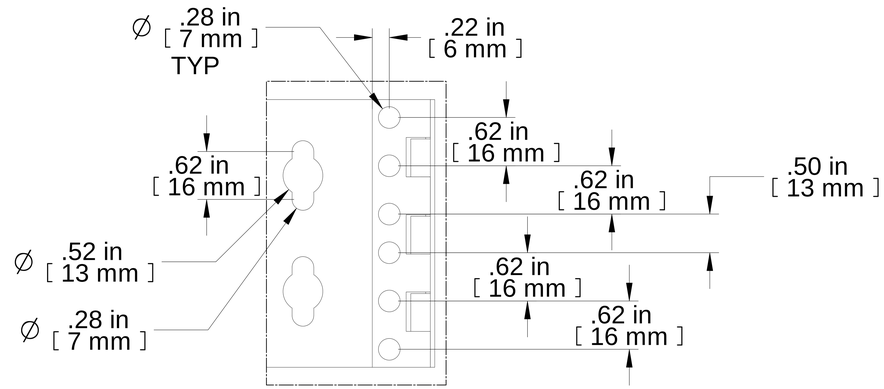

DETAIL A
3:1

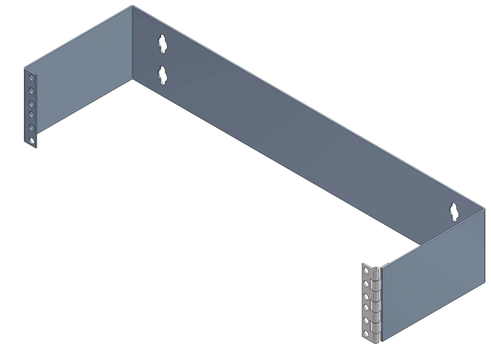

ISOMETRIC

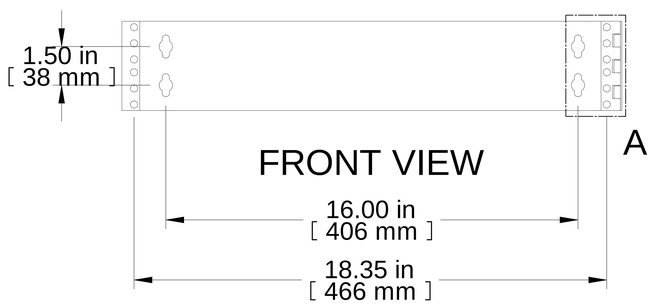

FRONT VIEW

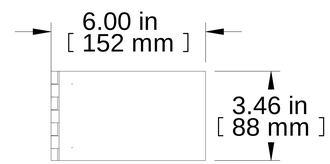

R.S. VIEW

PART NUMBERS	
RB-WR2	PAINTED BLACK SMOOTH

NOTES

Does not include wall mounting hardware.
Includes hardware for mounting equipment to bracket.
Includes full scale mounting template.

Français

Pour tous les détails sur nos produits, svp veuillez consulter notre site www.hammondmfg.com

Data subject to change without notice. Isometric drawing not to scale.
Les données sont sujettes à changement sans préavis.

RACK BASICS®

www.hammondmfg.com

PART NO. **RB-WR2**