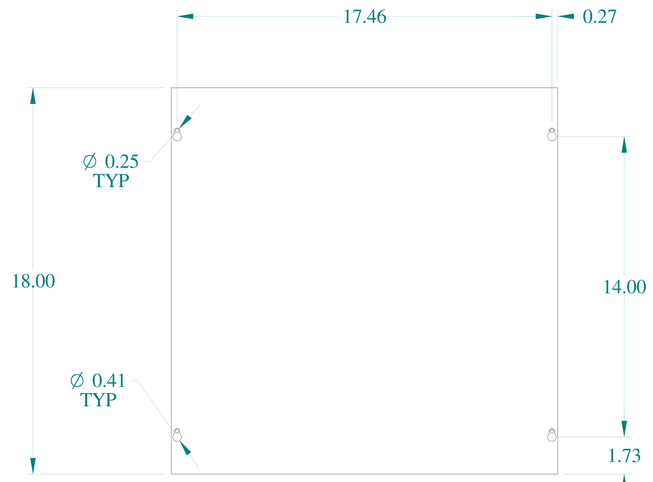

TOP VIEW

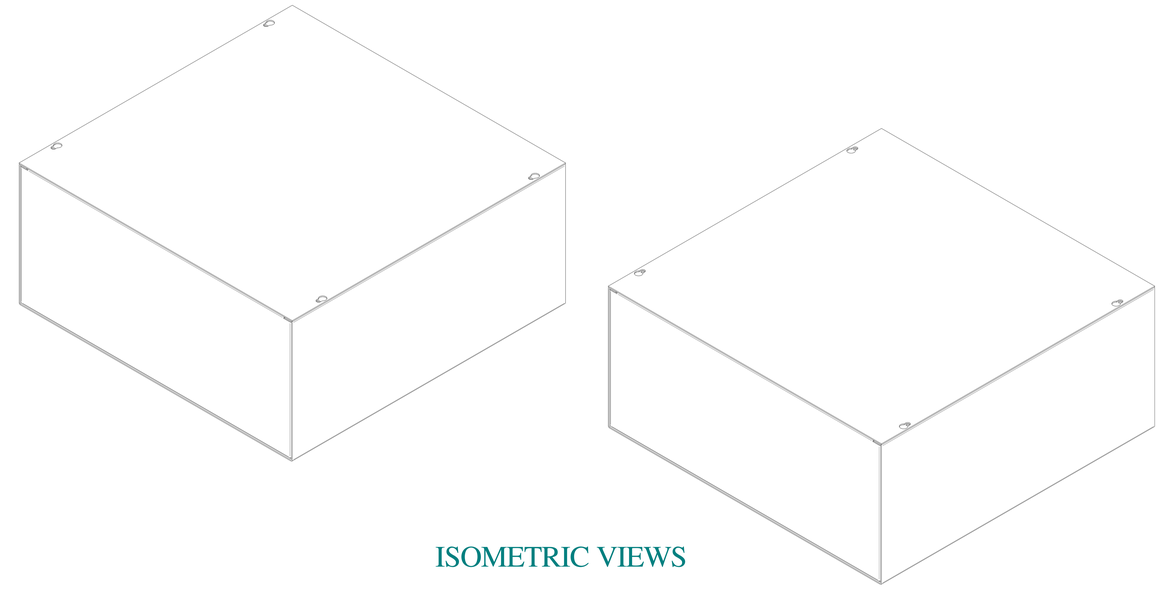

ISOMETRIC VIEWS

SIDE VIEW

FRONT VIEW

SIDE VIEW

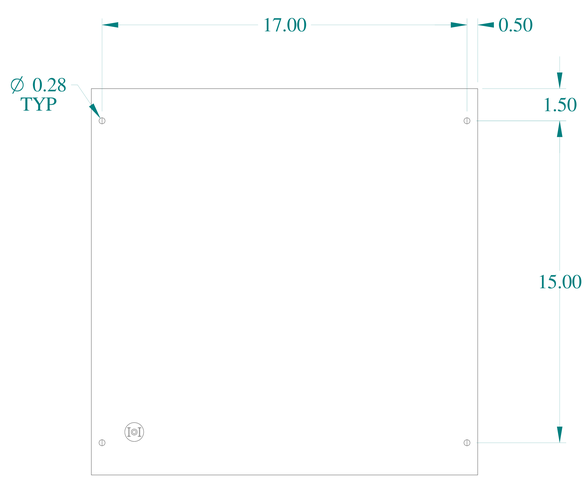

ISOMETRIC VIEWS

HAMMOND MANUFACTURING®

www.hammondmfg.com

Data subject to change without notice.

Part # : CSG18188	Date : Mar. 23, 2019

Link:www.hammfg.com/CSG18188