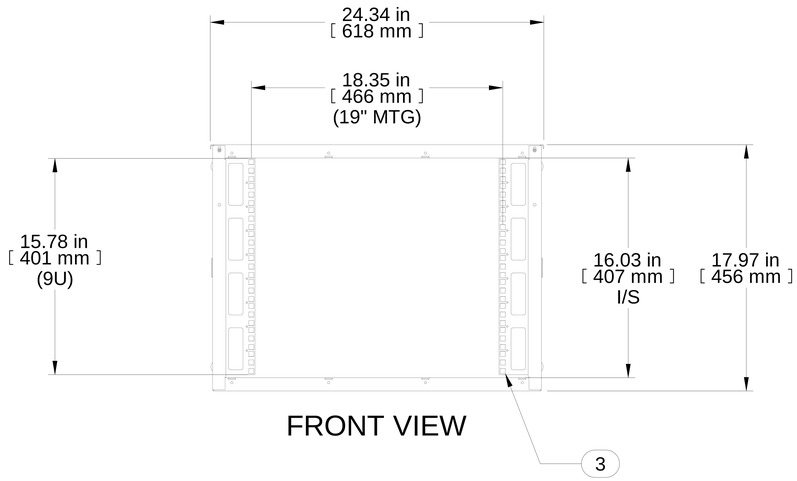


FRONT VIEW

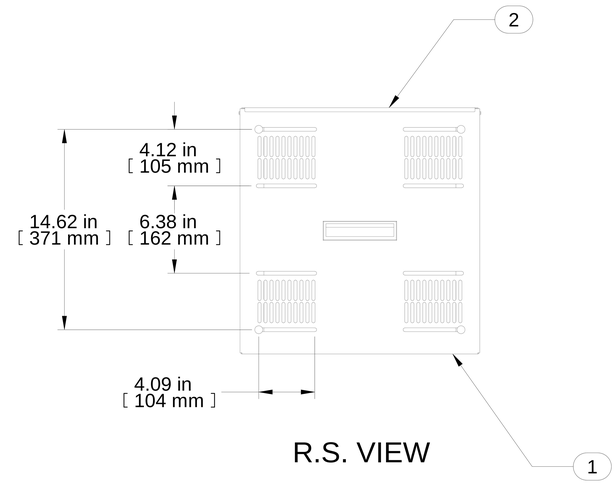


R.S. VIEW

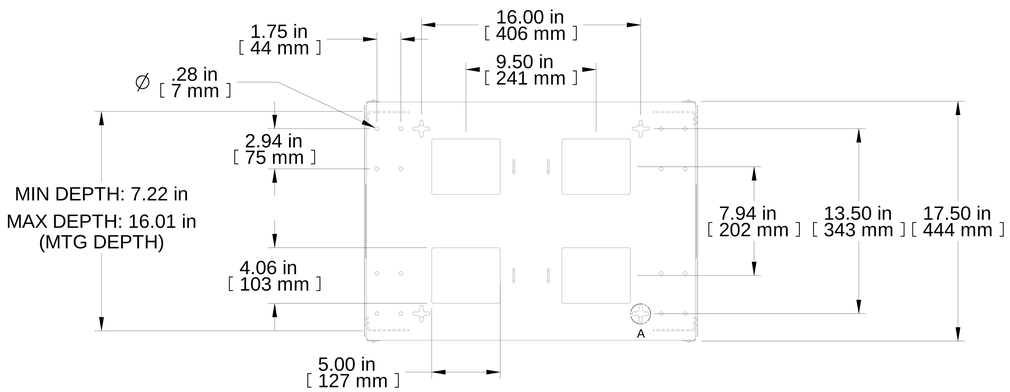


BOTTOM VIEW

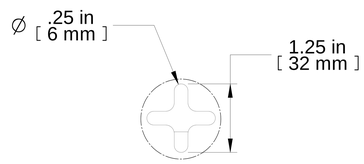


DETAIL A
SCALE 4:1

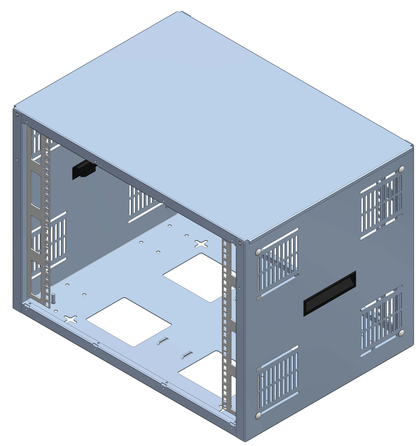

| Item Number | Title | Quantity |
|---|---|---|
| 1 | SDC - BODY | 1 |
| 2 | SDC COVER ASSEMBLY | 1 |
| 3 | SDC RAIL - SQUARE HOLE | 4 |

**PART NUMBERS**

SDC249U17BK PAINTED BLACK TEXTURED

**NOTES**

Assy Hardware Included
Mounting Hardware Not Included
See Hammond Website for Accessories

**Français**

Pour tous les détails sur nos produits,
svp veuillez consulter notre site www.hammondmfg.com

Data subject to change without notice. Isometric drawing not to scale.
Les données sont sujettes à changement sans préavis.

HAMMOND MANUFACTURING®

www.hammondmfg.com

**PART NO.** **SDC249U17BK**