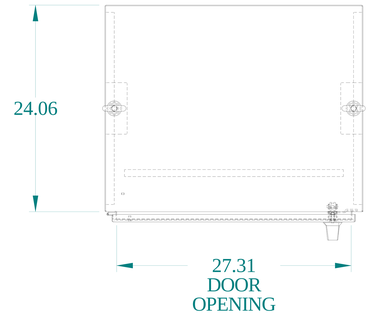

TOP VIEW

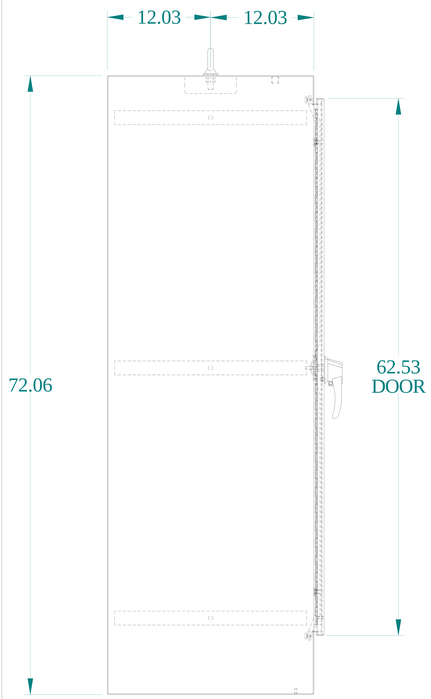

SIDE VIEW

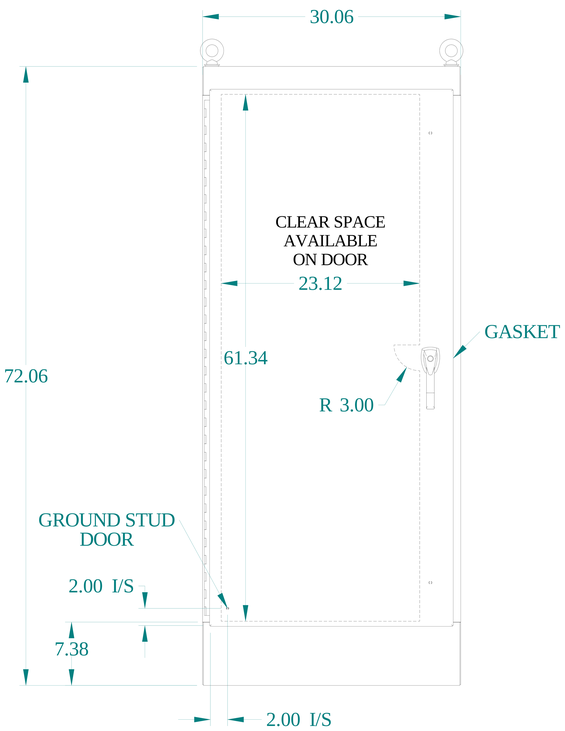

FRONT VIEW

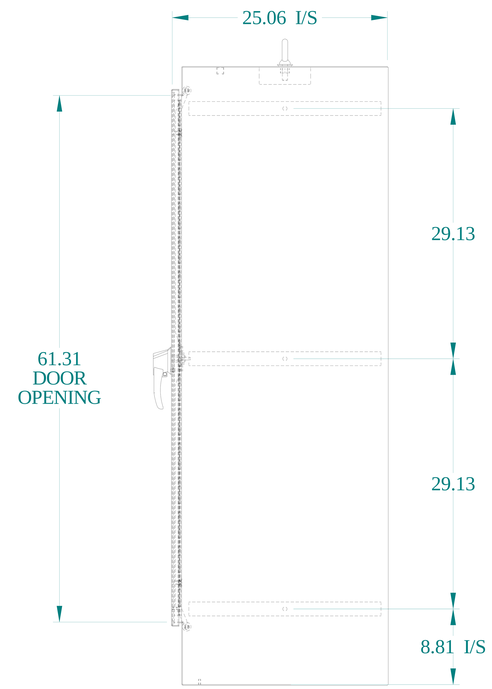

SIDE VIEW

BACK VIEW

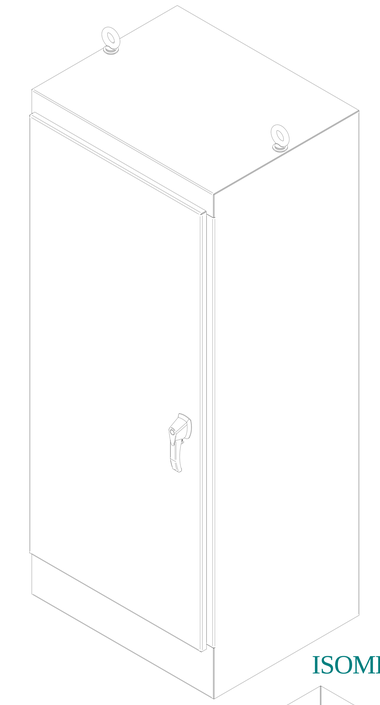

ISOMETRIC VIEWS

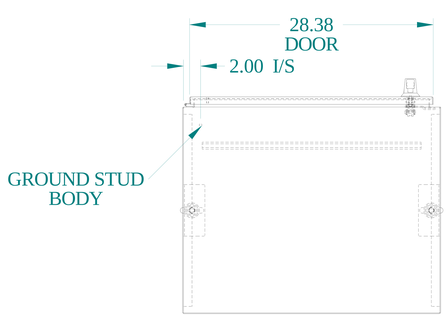

BOTTOM VIEW

www.hammondmfg.com

Data subject to change without notice.

Part # : HN4FS723024S16	Date : Jul. 24, 2025

Link:www.hammfg.com/HN4FS723024S16