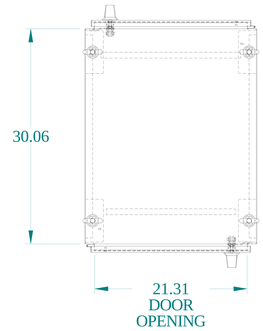

TOP VIEW

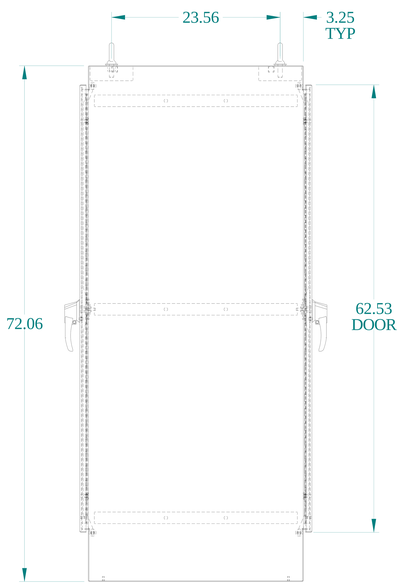

SIDE VIEW

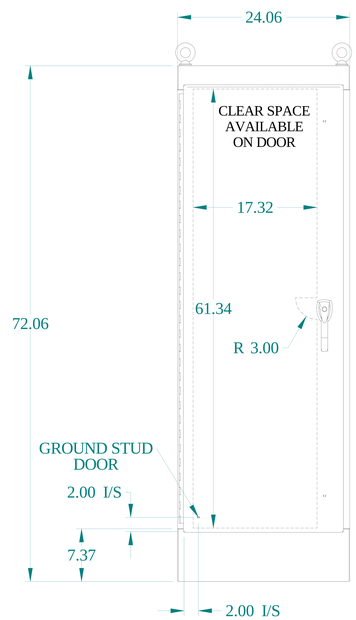

FRONT VIEW

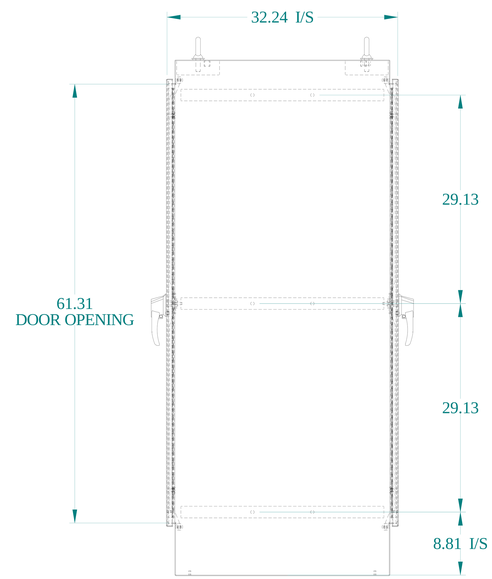

SIDE VIEW

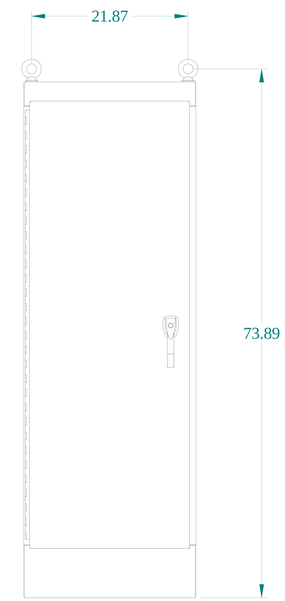

BACK VIEW

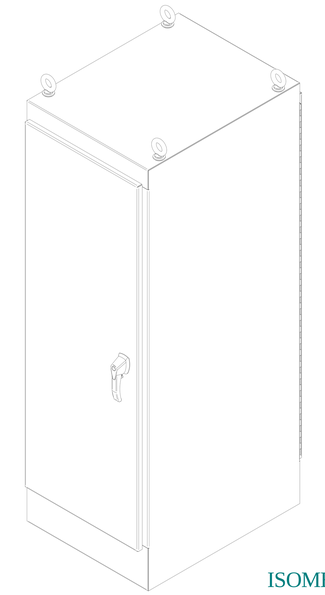

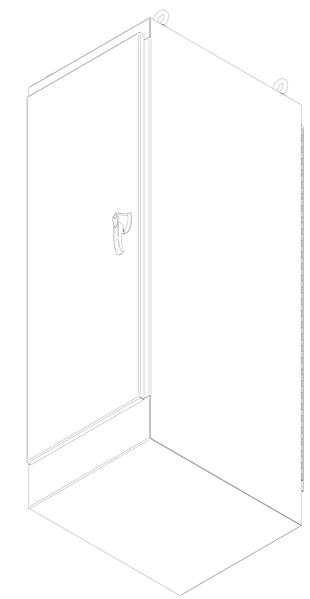

ISOMETRIC VIEWS

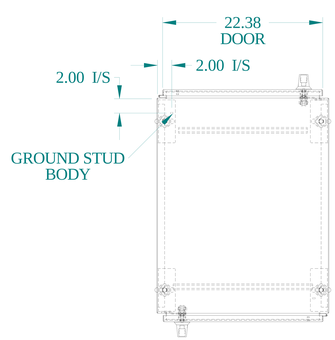

BOTTOM VIEW

HAMMOND MANUFACTURING®

www.hammondmfg.com

Data subject to change without notice.

Part # : HN4FS722430DS16	Date : Aug. 27, 2025

Link:www.hammfg.com/HN4FS722430DS16