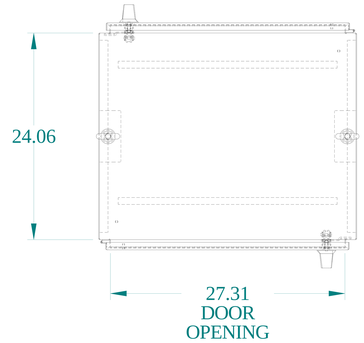

TOP VIEW

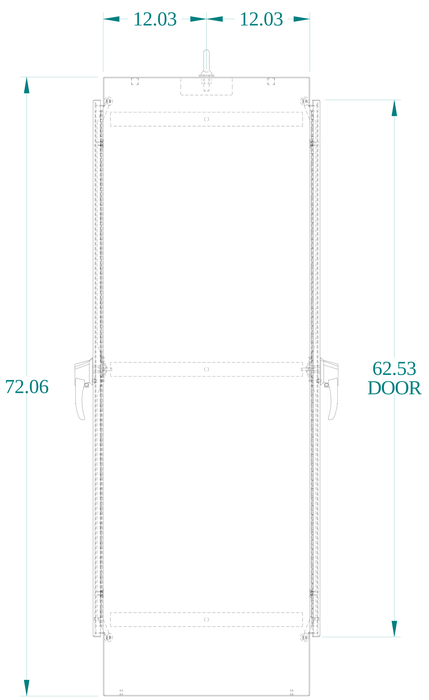

SIDE VIEW

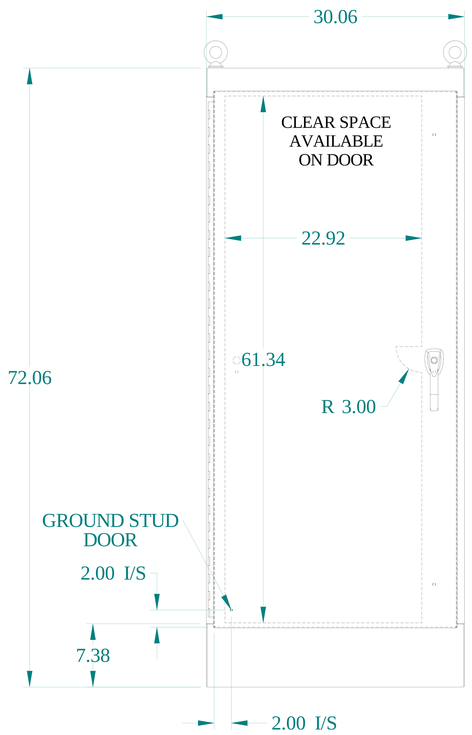

FRONT VIEW

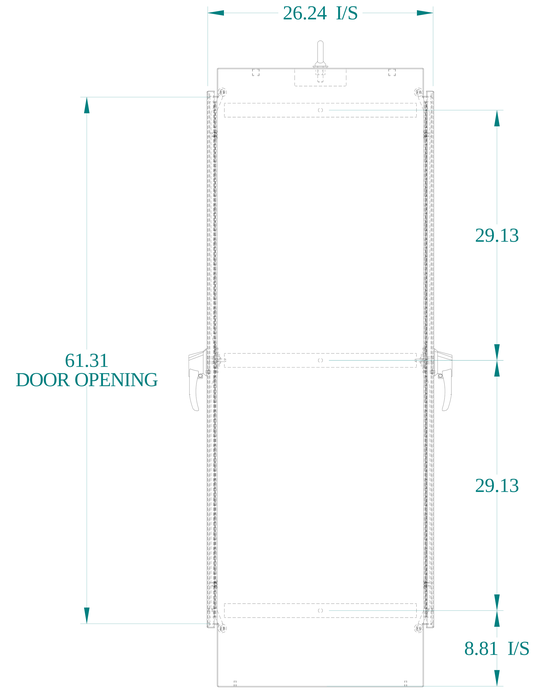

SIDE VIEW

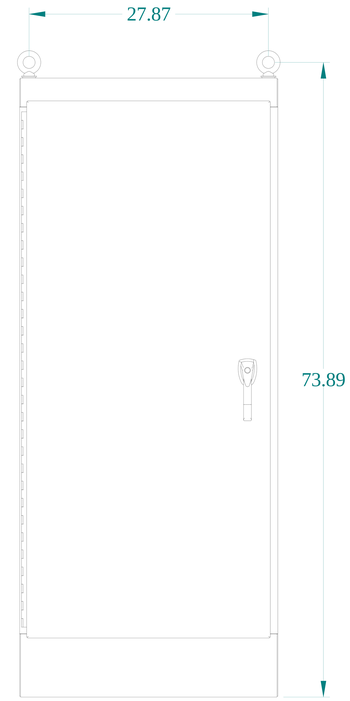

BACK VIEW

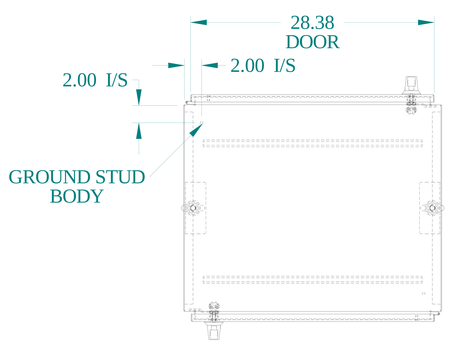

BOTTOM VIEW

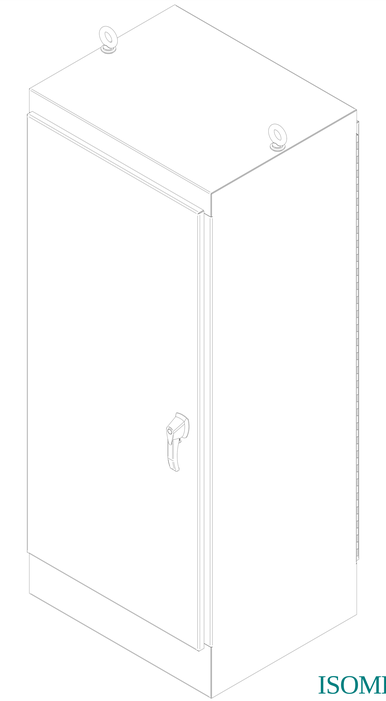

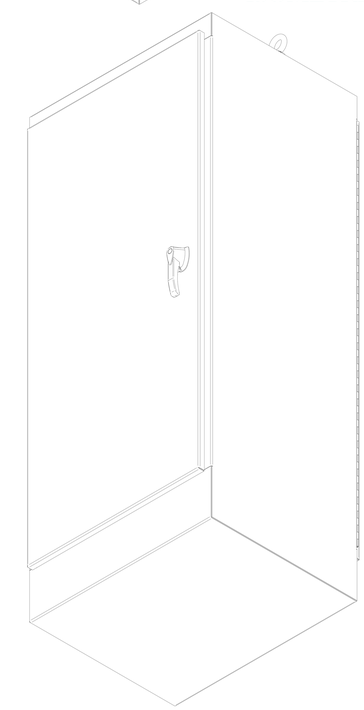

ISOMETRIC VIEWS

HAMMOND MANUFACTURING®

www.hammondmfg.com

Data subject to change without notice.

Part # : HN4FS723024DS16	Date : Jul. 24, 2025

Link:www.hammfg.com/HN4FS723024DS16