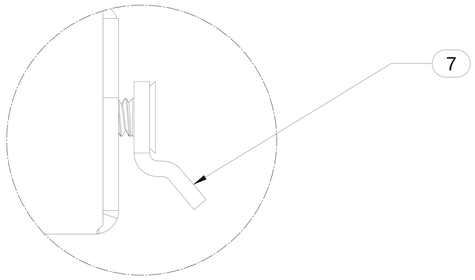

DETAIL A

TOP VIEW A

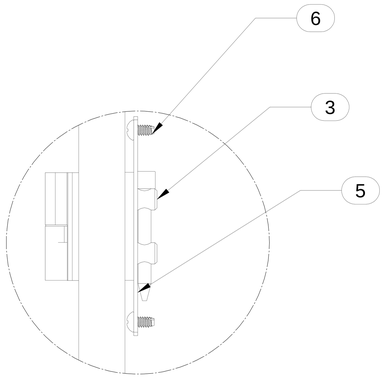

DETAIL B

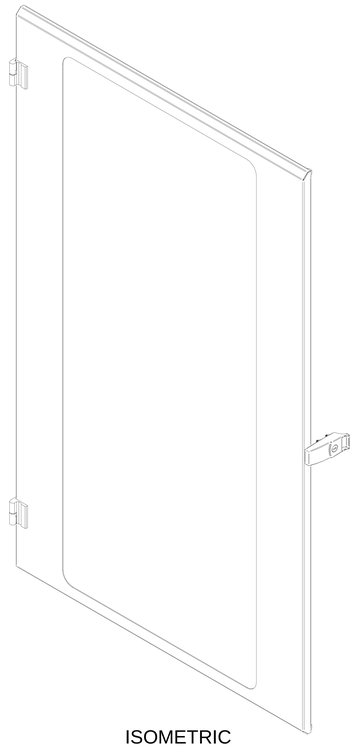

ISOMETRIC

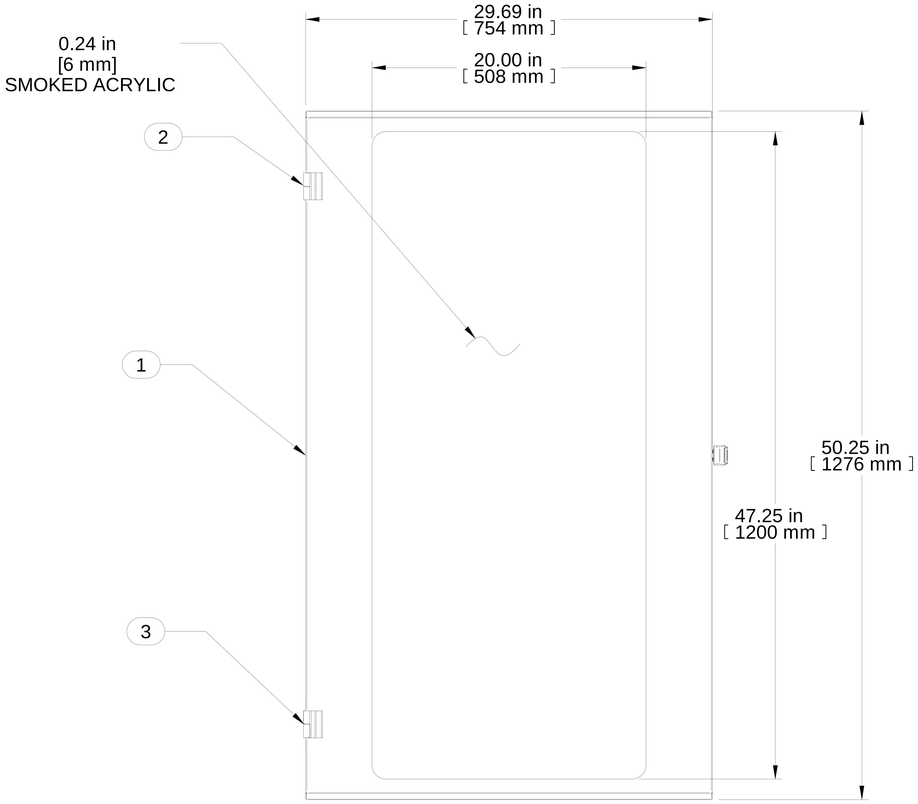

FRONT VIEW

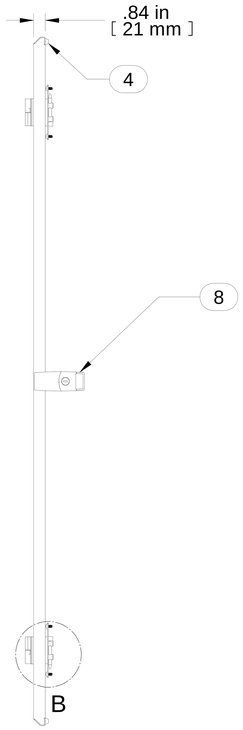

R.S. VIEW

Item Number	Title	Quantity
1	HWC - PLEXI DOOR	1
2	SURFACE DOOR HINGE (RH)	1
3	SURFACE DOOR HINGE (LH)	1
4	BUMPER FEET-RUBBER STICK ON	2
5	HINGE COVER PLATE	2
6	#10-24 X 3/8 THREAD CUTTING SCREW BLK	4
7	LATCH STRIKER - FAUCHER 772 6011	1
8	DRAW LATCH - FAUCHER 699 6011	1

PART NUMBERS

HWCWD3027UBK PAINTED BLACK TEXTURED

NOTES

Hinge Components and Latch Hardware Shipped Loose
See Hammond Website for Additional Accessories

Français

Pour tous les détails sur nos produits,
svp veuillez consulter notre site www.hammondmfg.com

Data subject to change without notice. Isometric drawing not to scale.
Les données sont sujettes à changement sans préavis.

HAMMOND MANUFACTURING®

www.hammondmfg.com

PART NO. **HWCWD3027UBK**