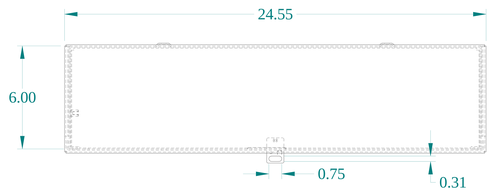

TOP VIEW

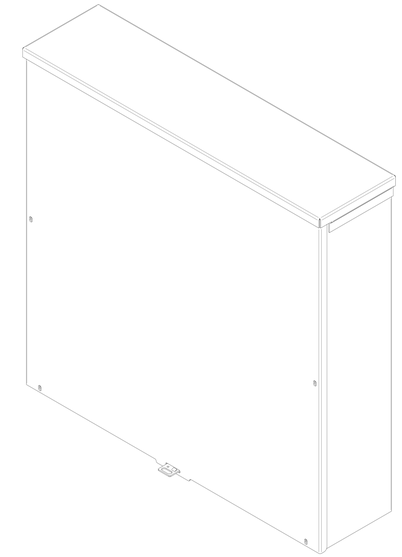

ISOMETRIC VIEWS

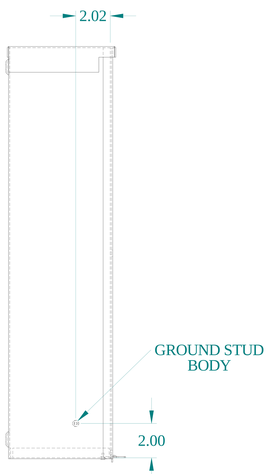

SIDE VIEW

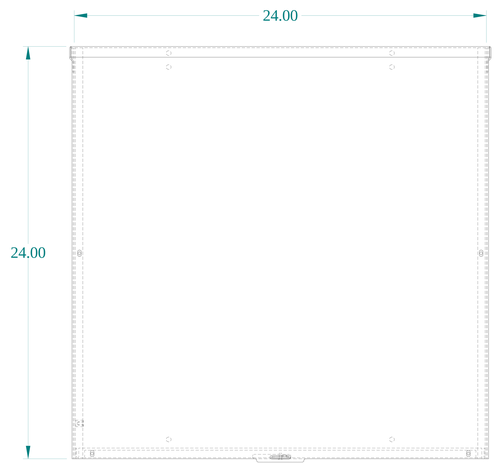

FRONT VIEW

SIDE VIEW

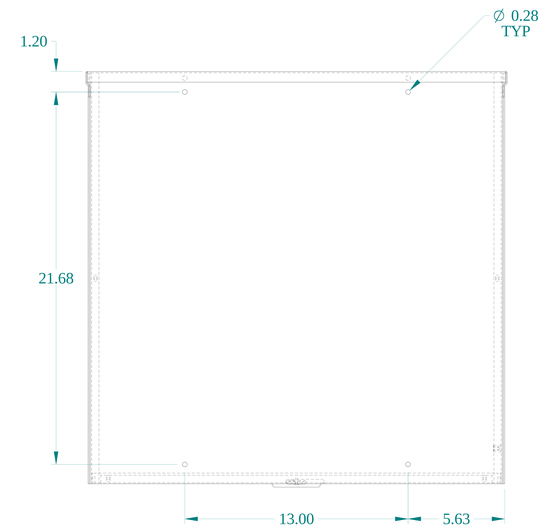

BACK VIEW

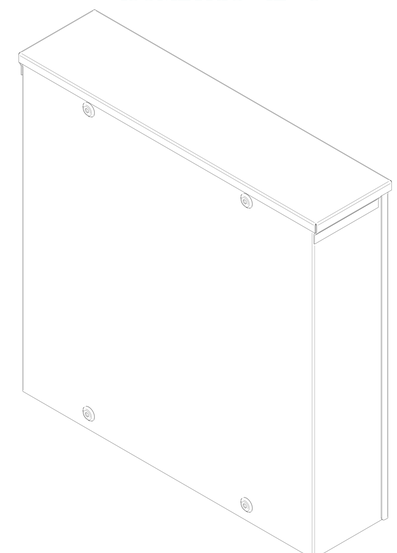

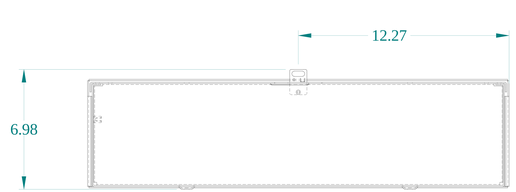

BOTTIOM VIEW

HAMMOND MANUFACTURING®

www.hammondmfg.com

Data subject to change without notice.

Part # : C3R24246SCNKO	Date : Mar. 10, 2025

Link:www.hammfg.com/C3R24246SCNKO