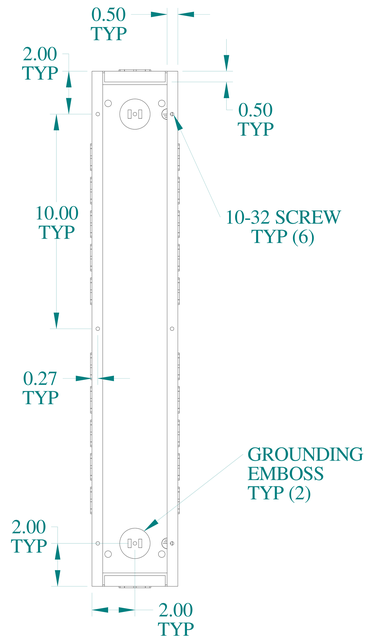

TOP VIEW
(COVER REMOVED)

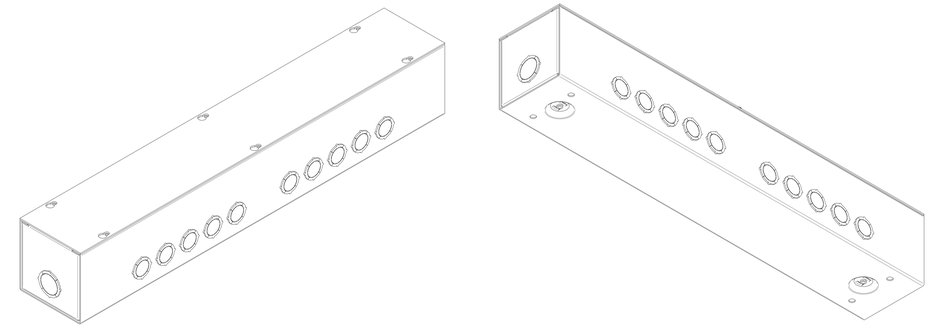

ISOMETRIC VIEWS

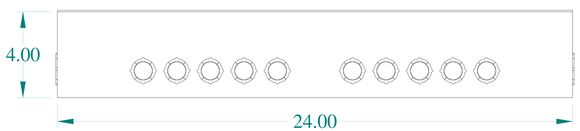

SIDE VIEW

FRONT VIEW

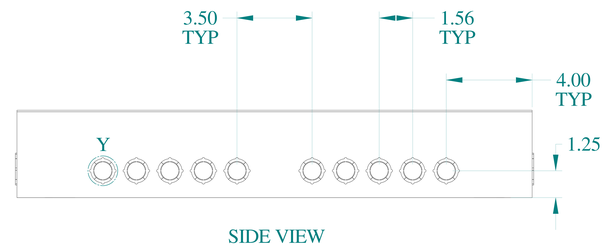

SIDE VIEW

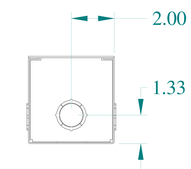

BACK VIEW

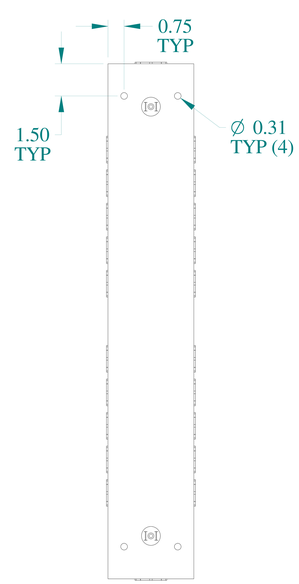

BOTTOM VIEW

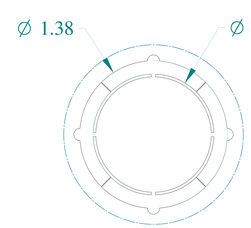

DETAIL Z
TYP (2)

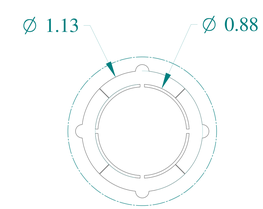

DETAIL Y
TYP (20)

HAMMOND MANUFACTURING®

www.hammondmfg.com

Data subject to change without notice.

Part # : CGT2444	Date : Jul. 8, 2019

Link:www.hammfg.com/CGT2444