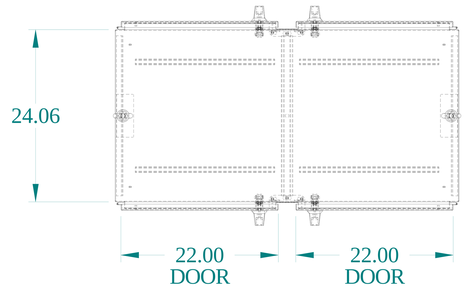

TOP VIEW

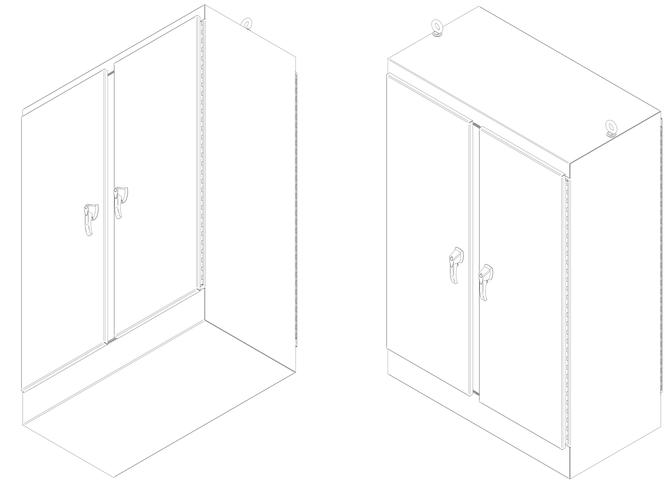

ISOMETRIC VIEWS

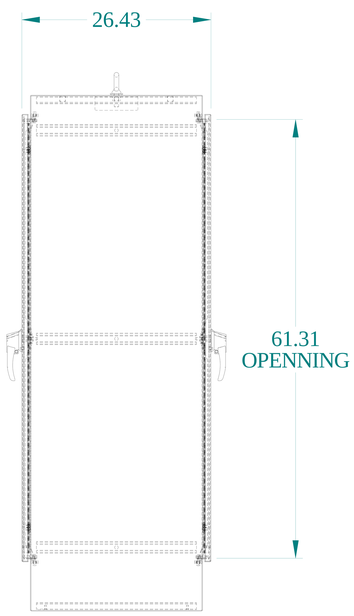

SIDE VIEW

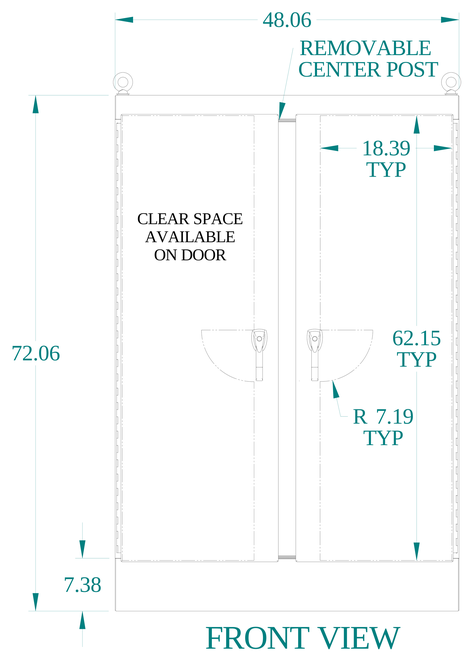

FRONT VIEW

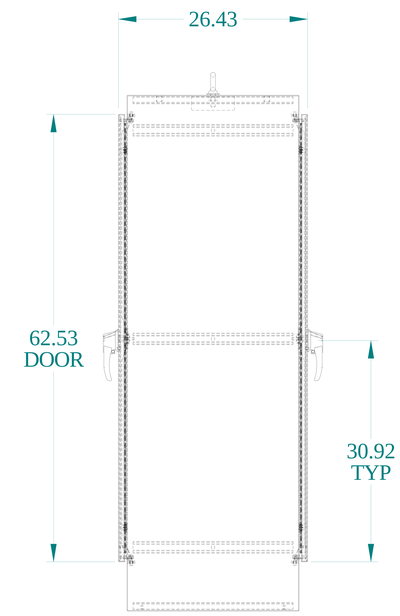

SIDE VIEW

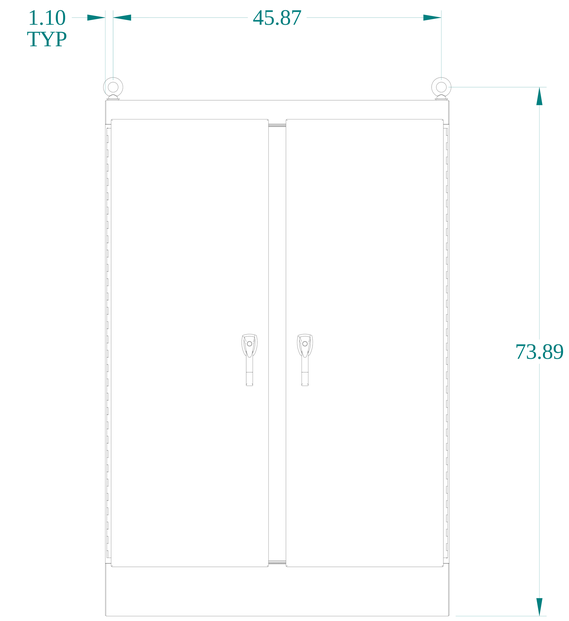

BACK VIEW

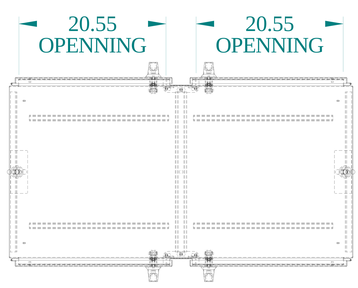

BOTTOM VIEW

HAMMOND MANUFACTURING®

www.hammondmfg.com

Data subject to change without notice.

Part # : HN4FS724824DASS	Date : Jul 23, 2025

Link:www.hammfg.com/HN4FS724824DASS