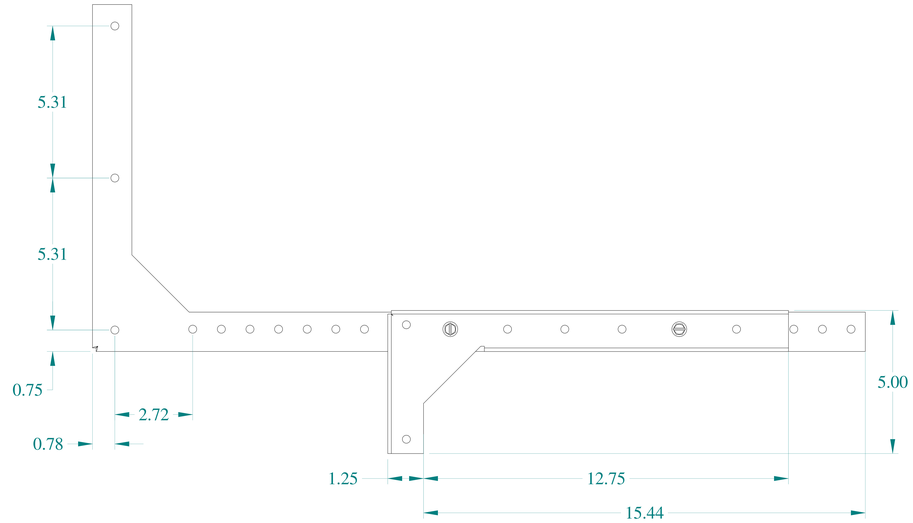

BACK VIEW

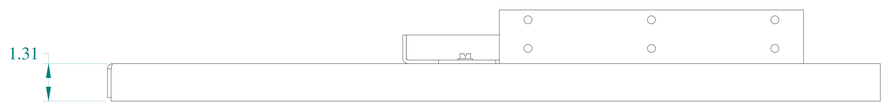

TOP VIEW

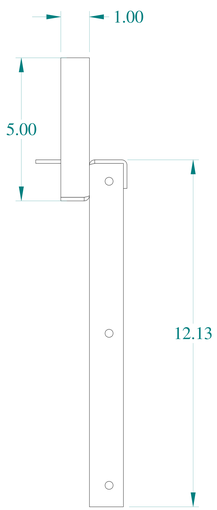

SIDE VIEW

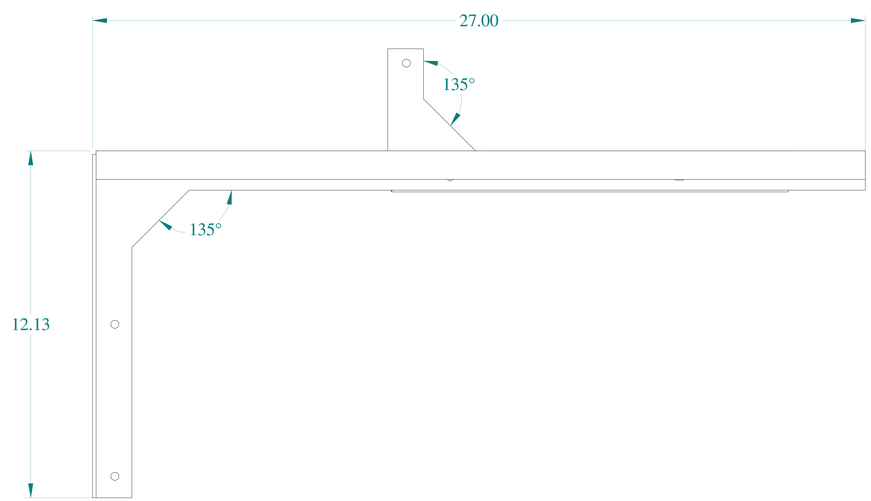

FRONT VIEW

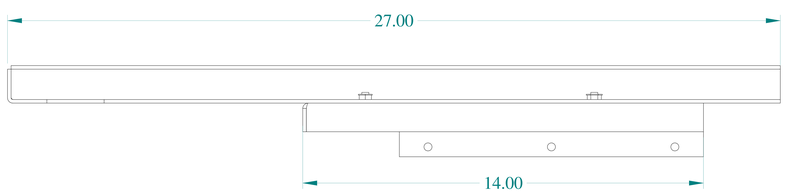

BOTTOM VIEW

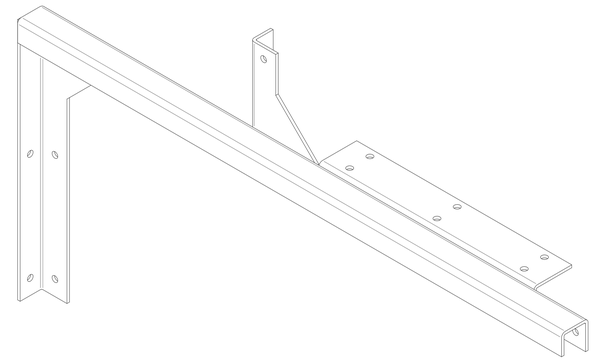

ISOMETRIC VIEWS

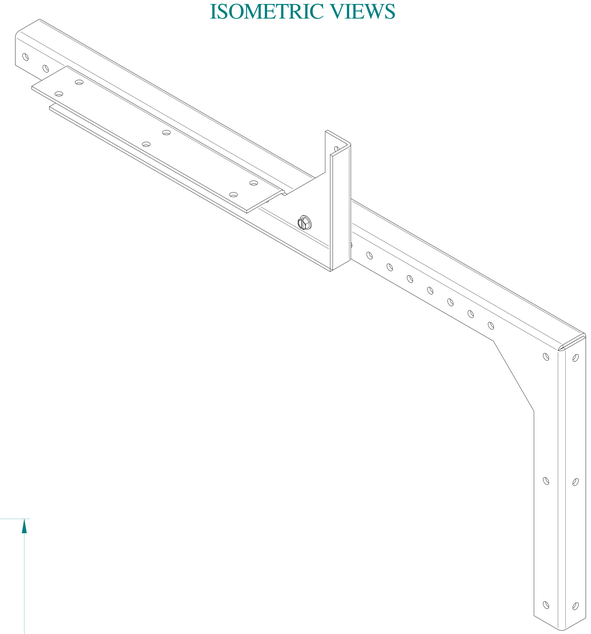

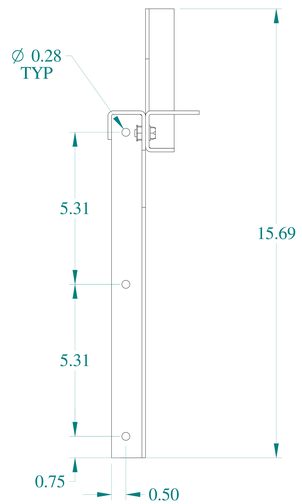

SIDE VIEW

HAMMOND MANUFACTURING®

www.hammondmfg.com

Data subject to change without notice.

Part # : CWHW10G	Date : Jan. 30, 2020

Link:www.hammfg.com/CWHW10G