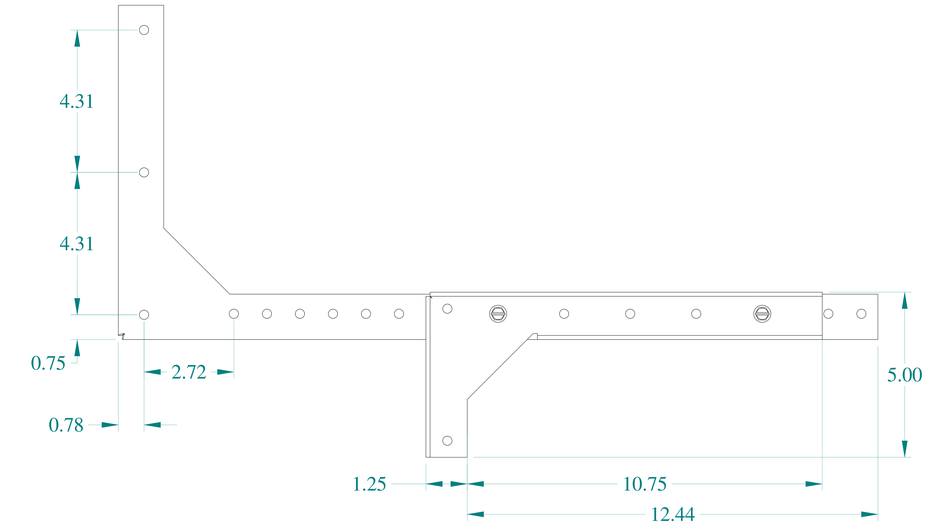

BACK VIEW

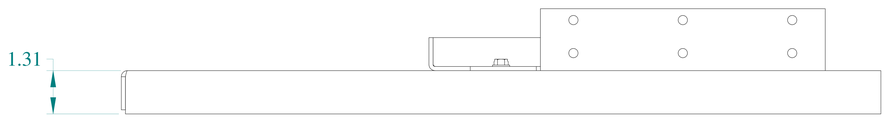

TOP VIEW

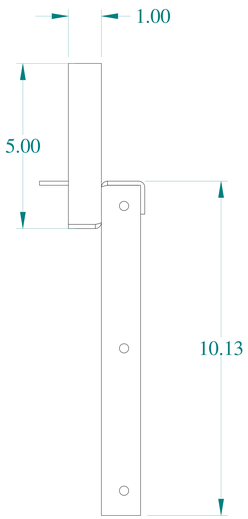

SIDE VIEW

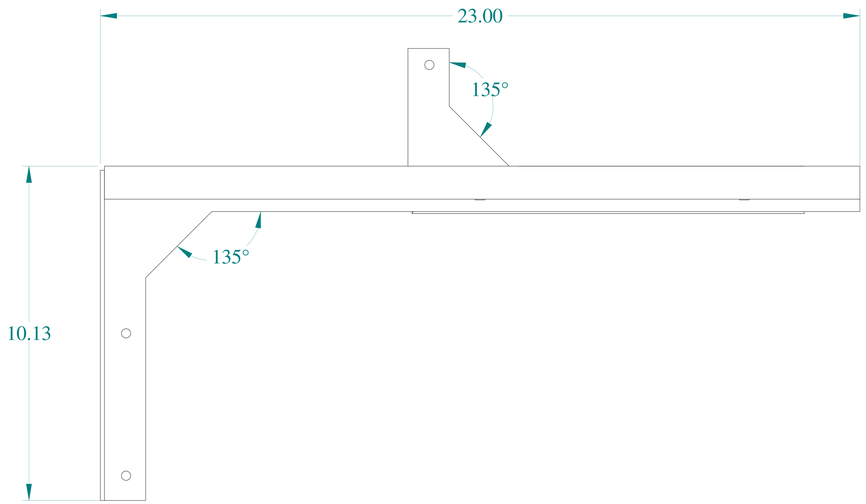

FRONT VIEW

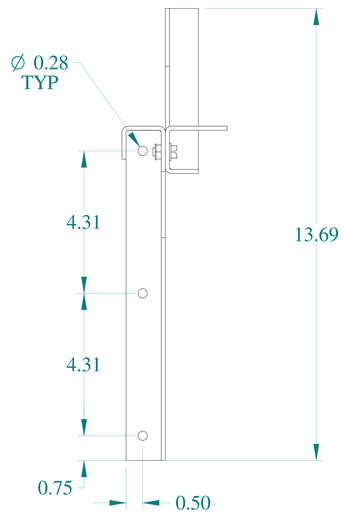

SIDE VIEW

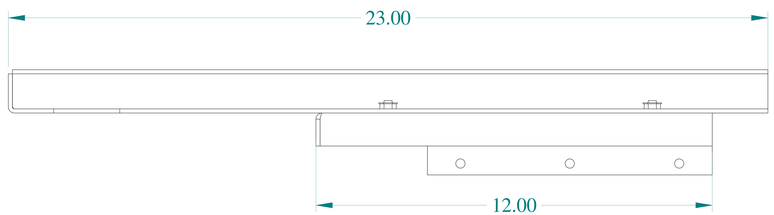

BOTTOM VIEW

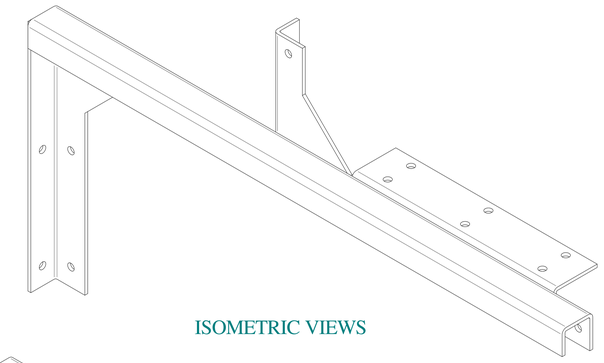

ISOMETRIC VIEWS

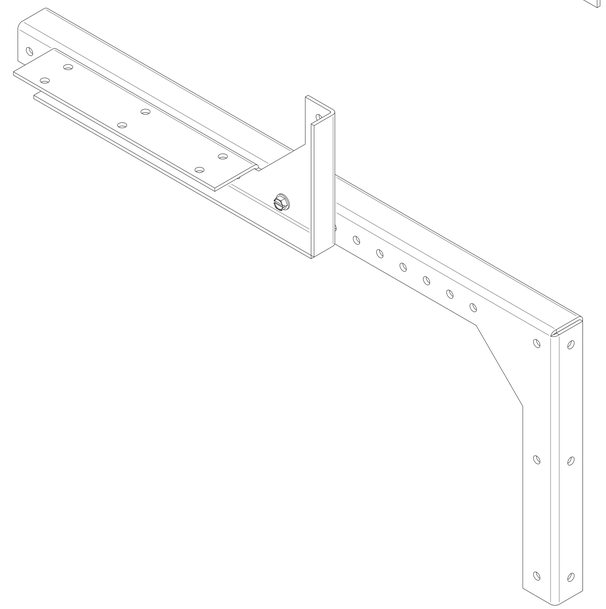

HAMMOND MANUFACTURING®

www.hammondmfg.com

Data subject to change without notice.

Part # : CWHW8G	Date : Jan. 30, 2020

Link:www.hammfg.com/CWHW8G