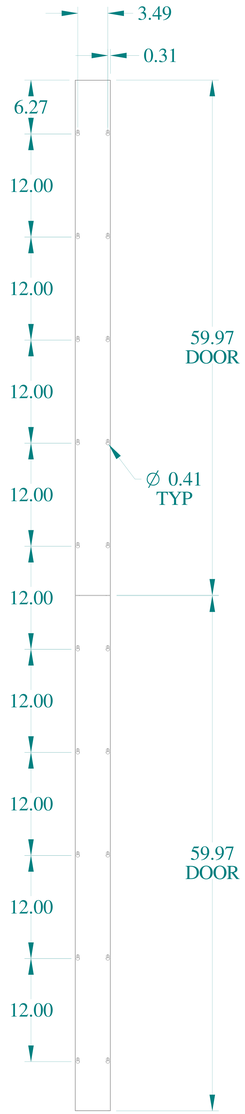

TOP VIEW

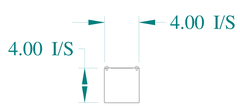

FRONT VIEW

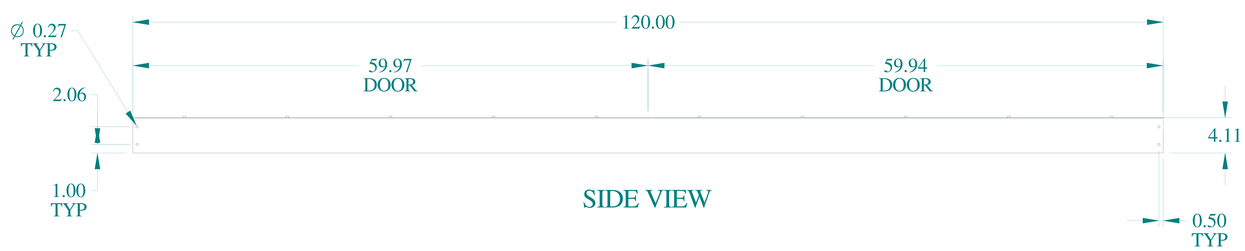

SIDE VIEW

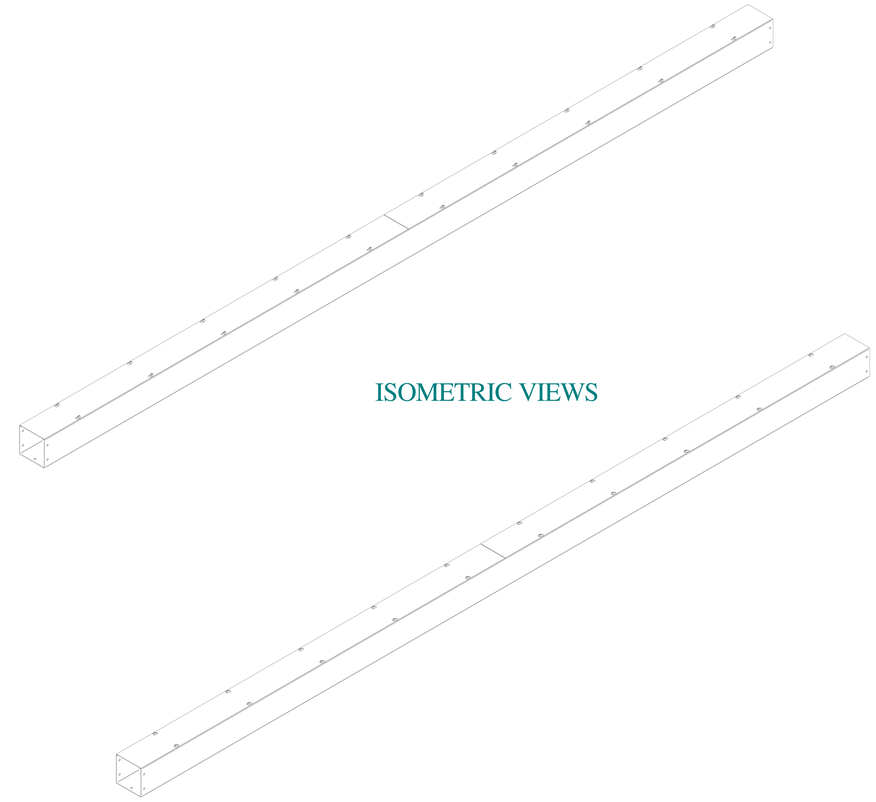

ISOMETRIC VIEWS

HAMMOND MANUFACTURING®

www.hammondmfg.com

Data subject to change without notice.

Part # : CWSC4120GNK	Date : Jan. 15, 2020

Link:www.hammfg.com/CWSC4120GNK