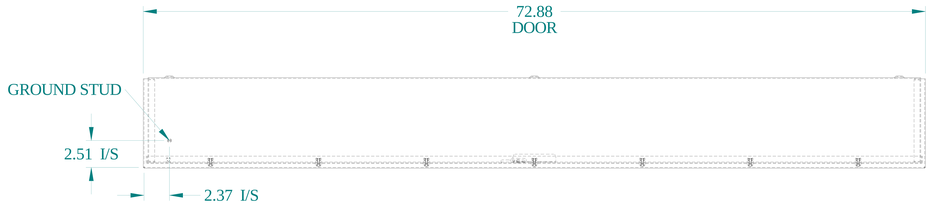

TOP VIEW

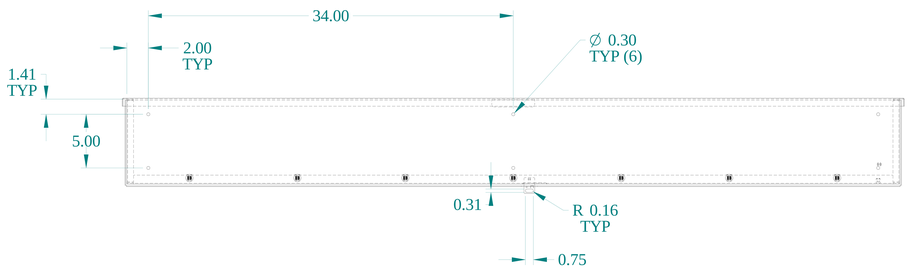

BACK VIEW

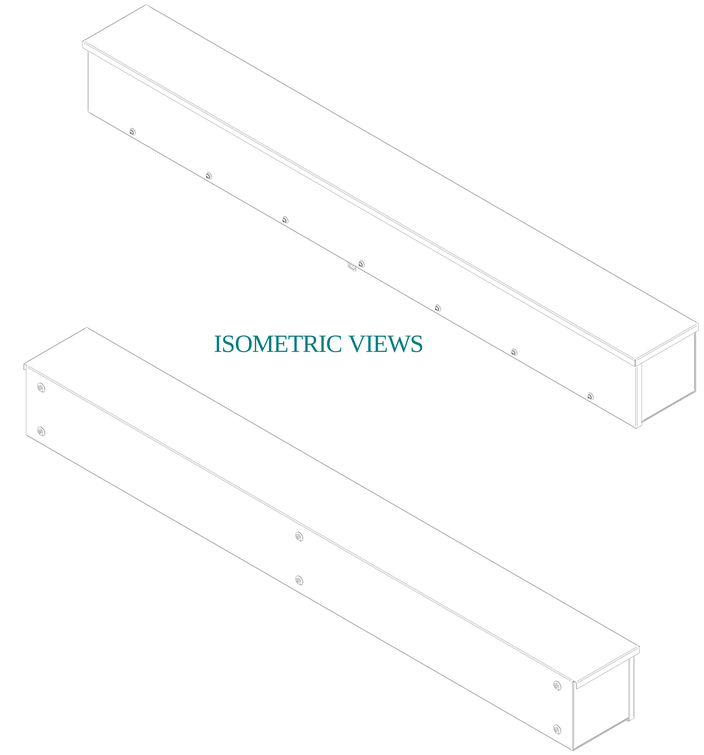

ISOMETRIC VIEWS

SIDE VIEW

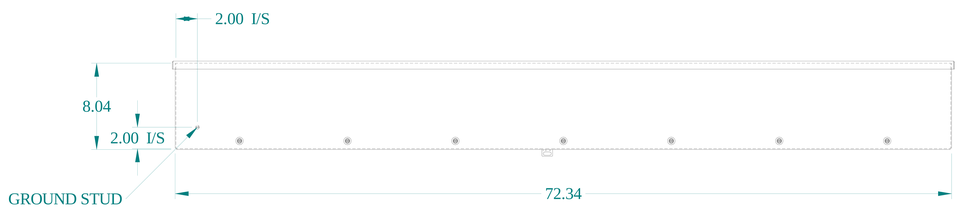

FRONT VIEW

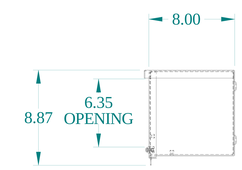

SIDE VIEW

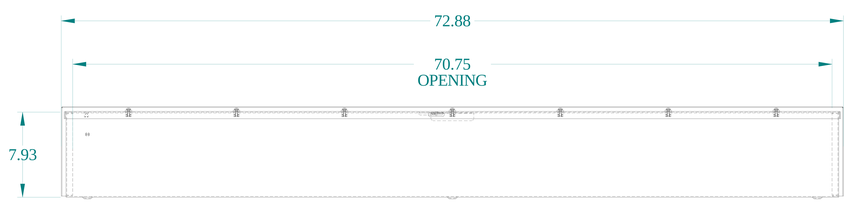

BOTTOM VIEW

HAMMOND MANUFACTURING®

www.hammondmfg.com

Data subject to change without notice.

Part # : C3RWT872G	Date : Jun. 19, 2024

Link:www.hammfg.com/C3RWT872G