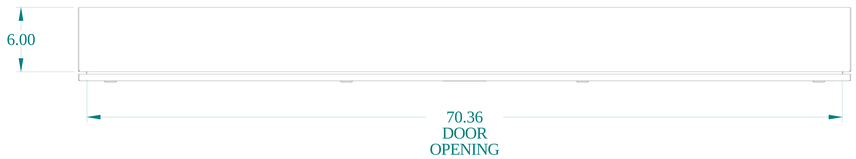


TOP VIEW

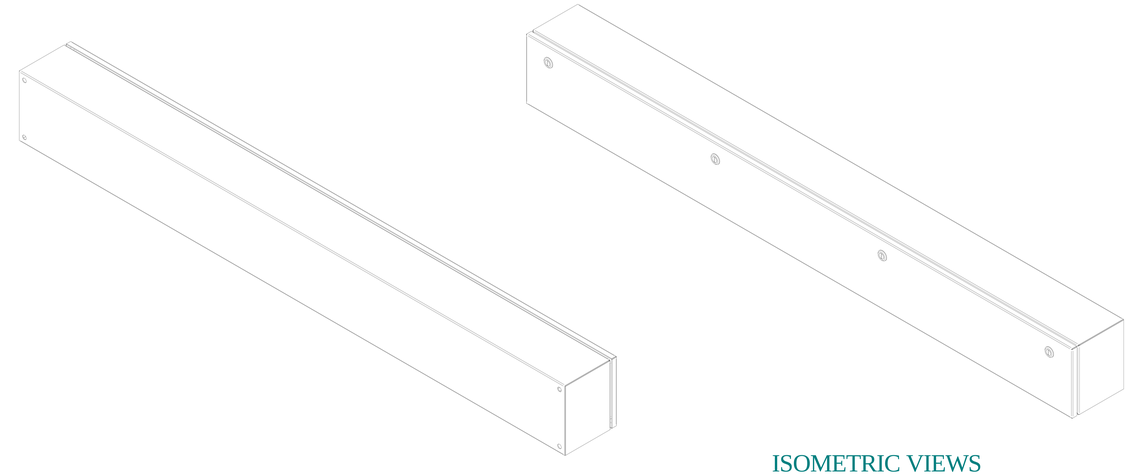

ISOMETRIC VIEWS

SIDE VIEW

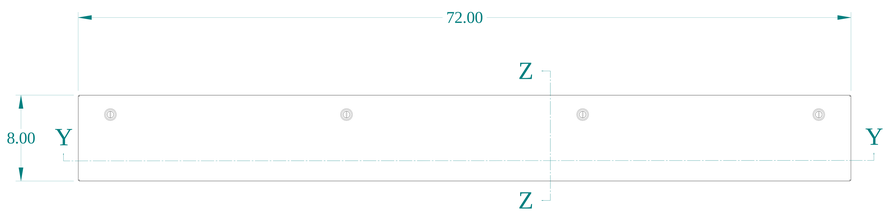


FRONT VIEW

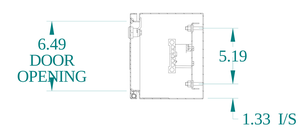


SECTION Z-Z

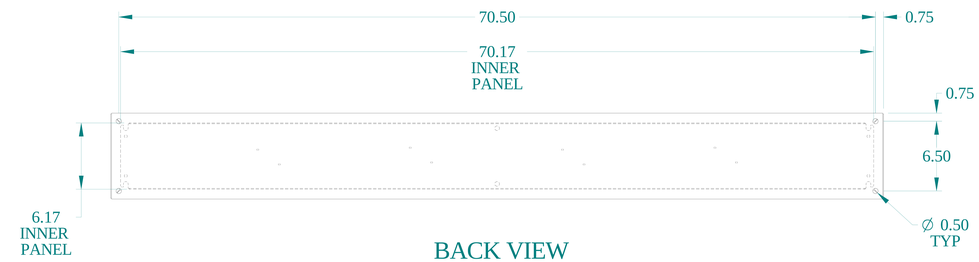


BACK VIEW

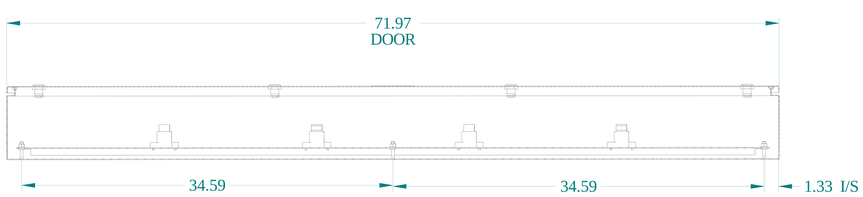


SECTION Y-Y

HAMMOND MANUFACTURING®

www.hammondmfg.com

Data subject to change without notice.

| | |
|---|---|
| Part # : CN4ST6104SS | Date : Apr. 19, 2021 |

Link:www.hammfg.com/CN4ST6104SS