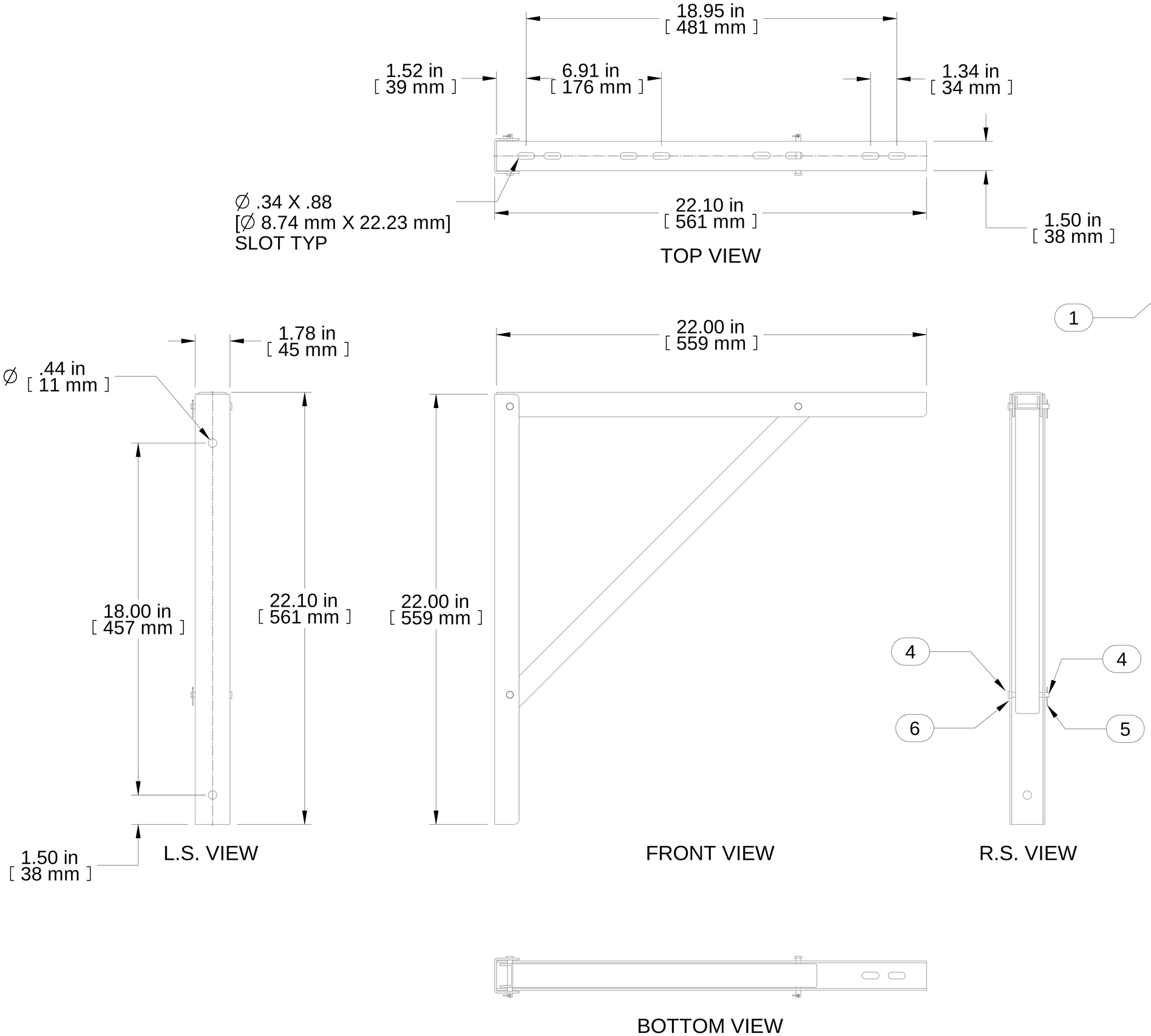

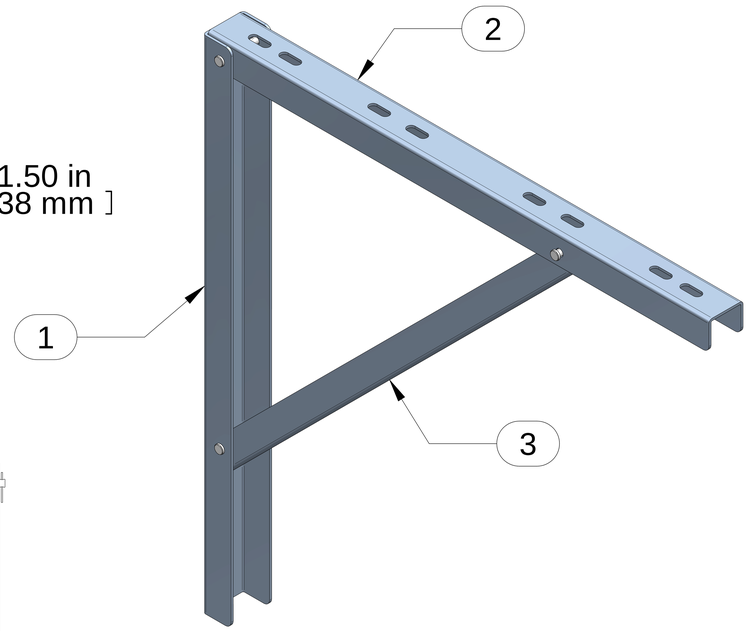

ISOMETRIC

Item Number	Title	Quantity
1	CLWS - WALL SUPPORT BRKT	1
2	CLWS - TRAY SUPPORT BRKT	1
3	CLWS - ANGLE SUPPORT	1
4	CLEVIS PIN .25 X 2.00, ST ZP	3
5	COTTER PIN, 3/64 X 15/16, ZP	3

PART NUMBERS

CLWS18	PAINTED BLACK

NOTES

Notes
Assembly hardware included
J Bolts included (2x)
Wall mounting hardware not included
See Hammond Website for additional info.

Français

Pour tous les détails sur nos produits,
svp veuillez consulter notre site www.hammondmfg.com

Data subject to change without notice. Isometric drawing not to scale.
Les données sont sujettes à changement sans préavis.

HAMMOND MANUFACTURING®

www.hammondmfg.com

PART NO. **CLWS18**