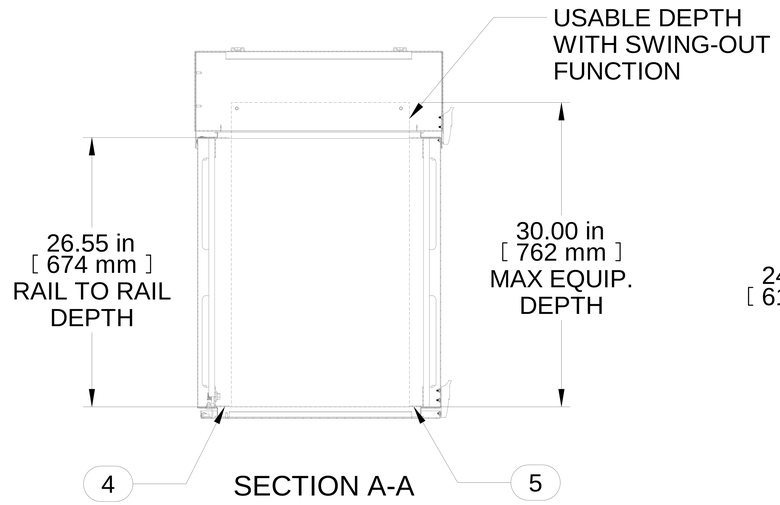

SECTION A-A

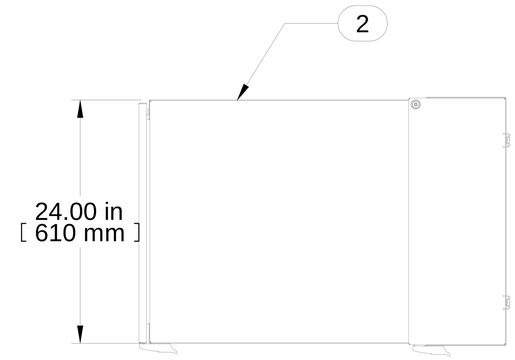

TOP VIEW

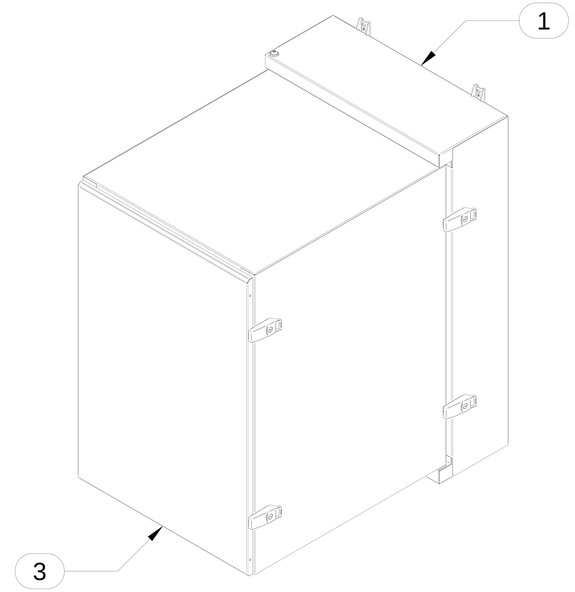

ISOMETRIC

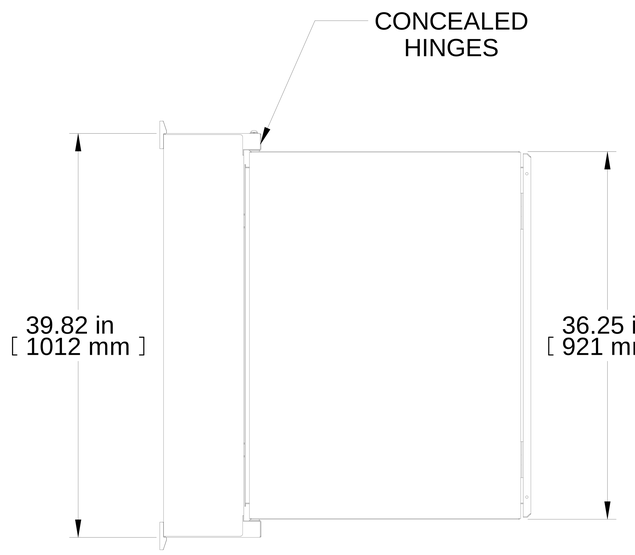

L.S. VIEW

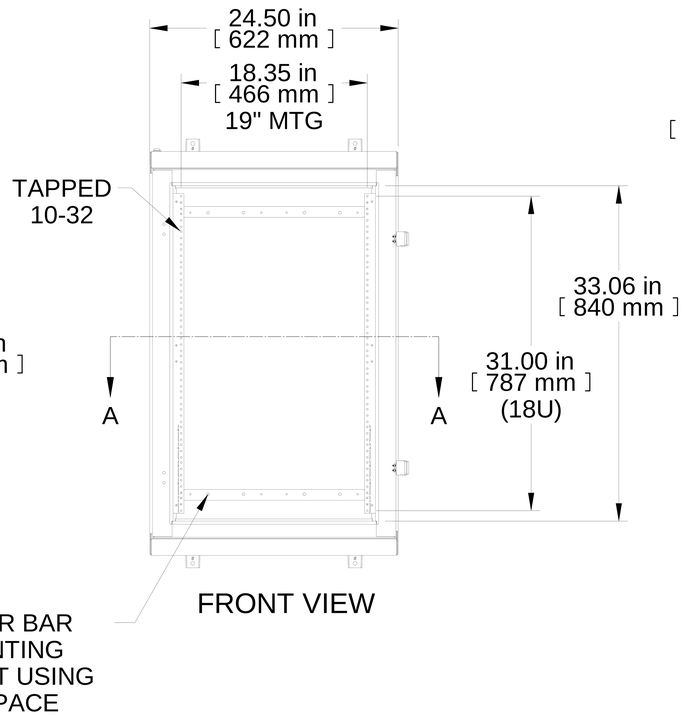

FRONT VIEW

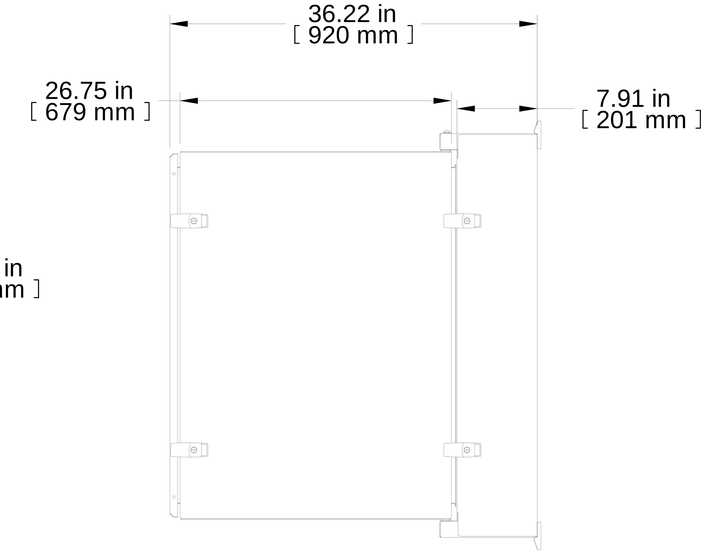

R.S. VIEW

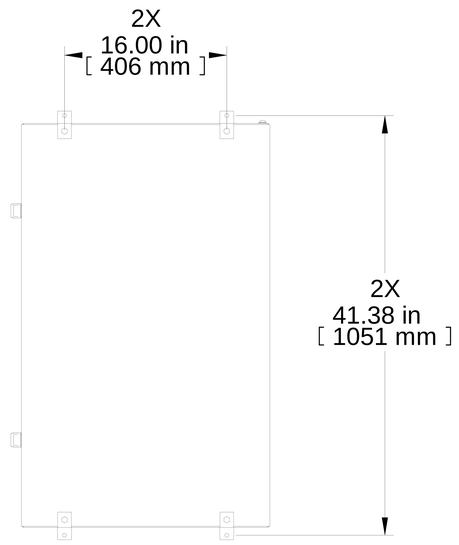

REAR VIEW

Item Number	Title	Quantity
1	24W 18U NWC - REAR ASSY	1
2	24W 18U NWC - CENTRE	1
3	24W 18U NWC - SOLID DOOR	1
4	H1 PANEL RAIL 18U LH	2
5	H1 PANEL RAIL 18U RH	2

PART NUMBERS

NWC18U2436SN PAINTED BLACK TEXTURED

NOTES

Solid Door Included
See Hammond Website for Additional Accessories

Français

Pour tous les détails sur nos produits,
svp veuillez consulter notre site www.hammondmfg.com

Data subject to change without notice. Isometric drawing not to scale.
Les données sont sujettes à changement sans préavis.

HAMMOND MANUFACTURING®

www.hammondmfg.com

PART NO. NWC18U2436SNBK