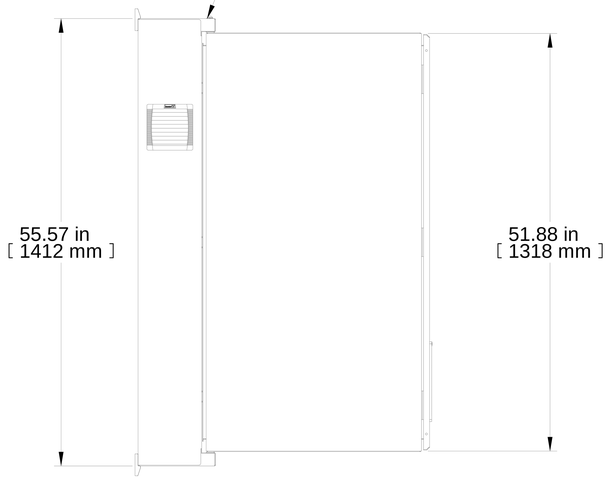

L.S. VIEW

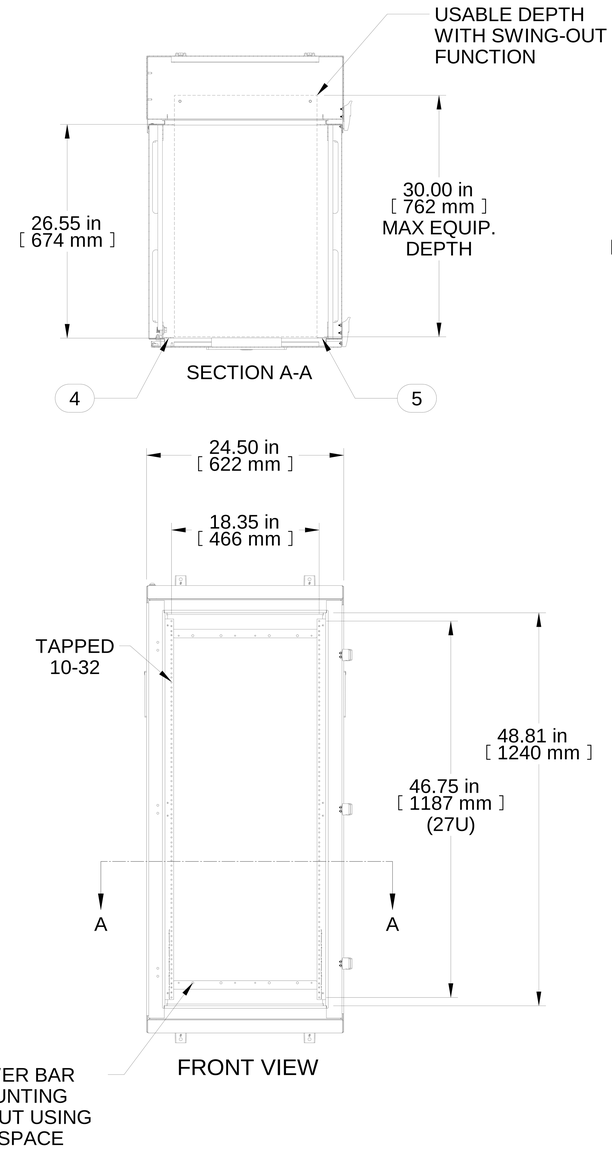

FRONT VIEW

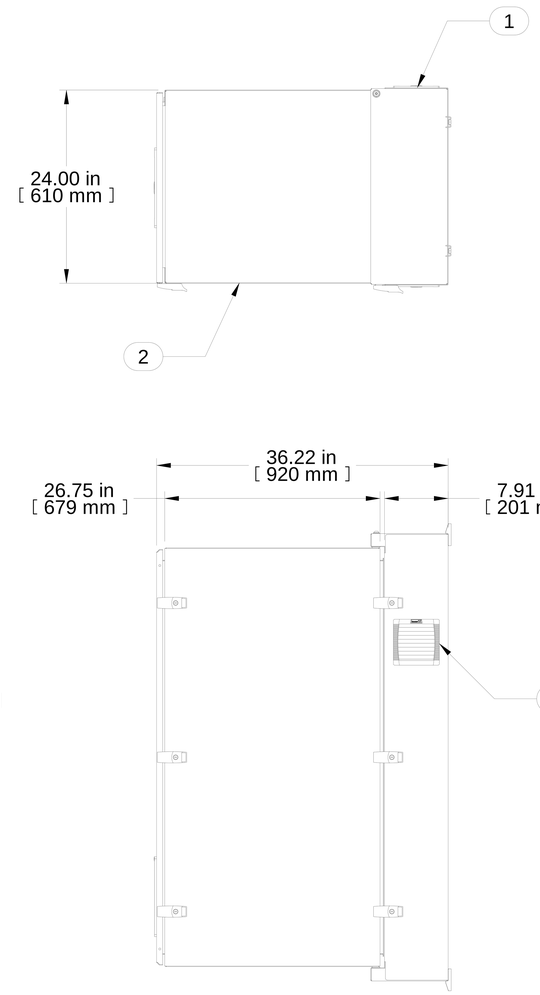

R.S. VIEW

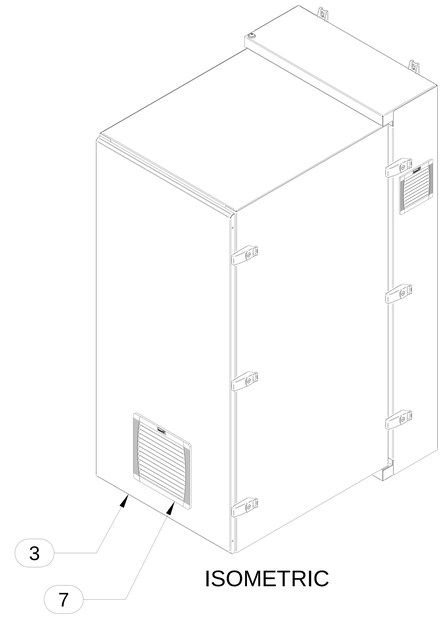

ISOMETRIC

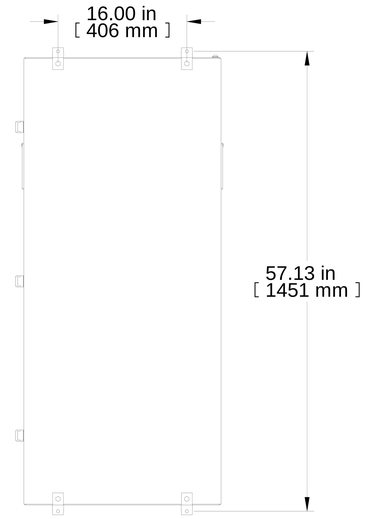

REAR VIEW

Item Number	Title	Quantity
1	24W 27U NWC - REAR ASSY	1
2	24W 27U NWC - CENTRE	1
3	24W 27U NWC - SOLID DOOR	1
4	H1 PANEL RAIL LH	2
5	H1 PANEL RAIL RH	2
6	6" EXHAUST FILTER T12	2
7	10" EXHAUST FILTER T12	1

PART NUMBERS

NWC27U2436SF	PAINTED LIGHT GRAY TEXTURED

NOTES

Solid Door Included, Filters Ship Inside Cabinet

See Hammond Website for Additional Accessories

Français

Pour tous les détails sur nos produits,
svp veuillez consulter notre site www.hammondmfg.com

Data subject to change without notice. Isometric drawing not to scale.
Les données sont sujettes à changement sans préavis.

HAMMOND MANUFACTURING®

www.hammondmfg.com

PART NO. NWC27U2436SFLG