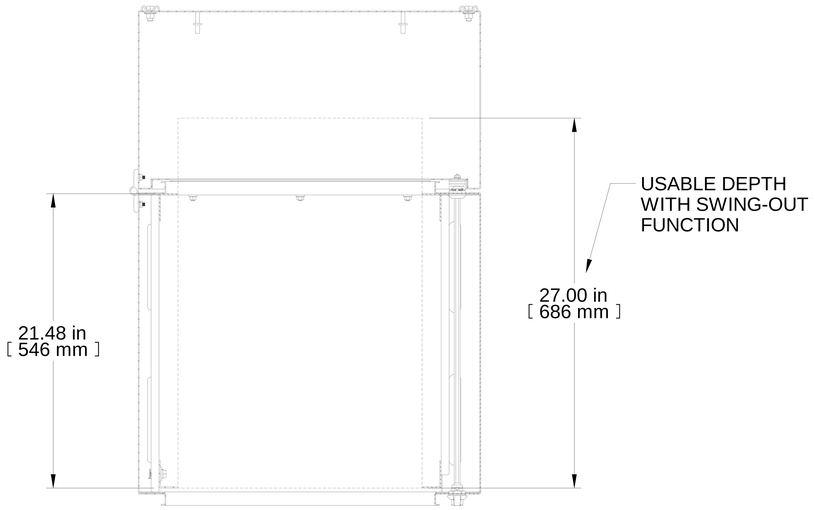

SECTION A-A

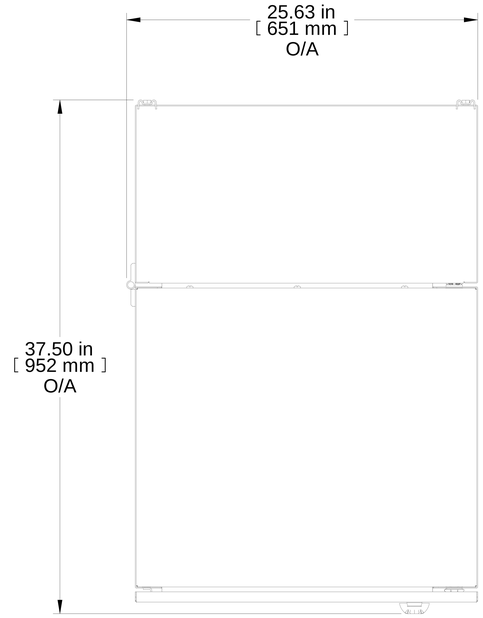

TOP VIEW

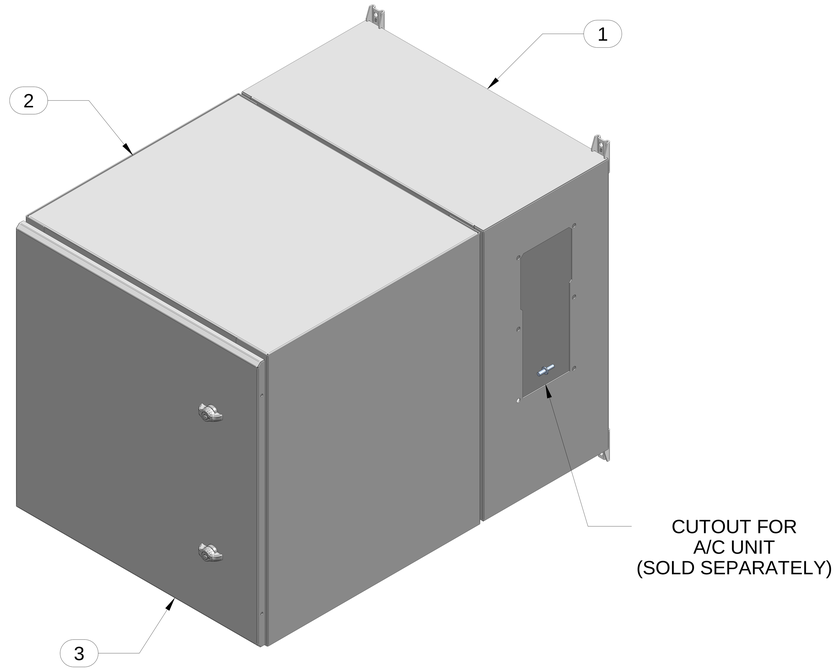

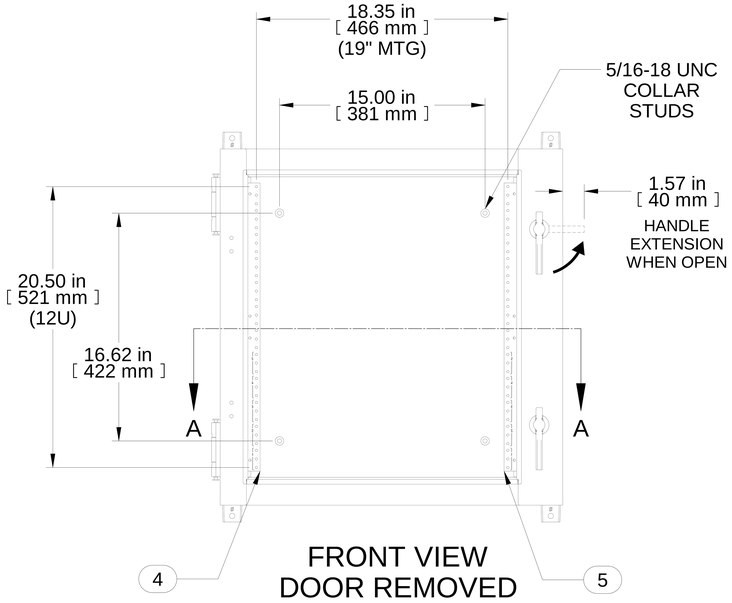

FRONT VIEW
DOOR REMOVED

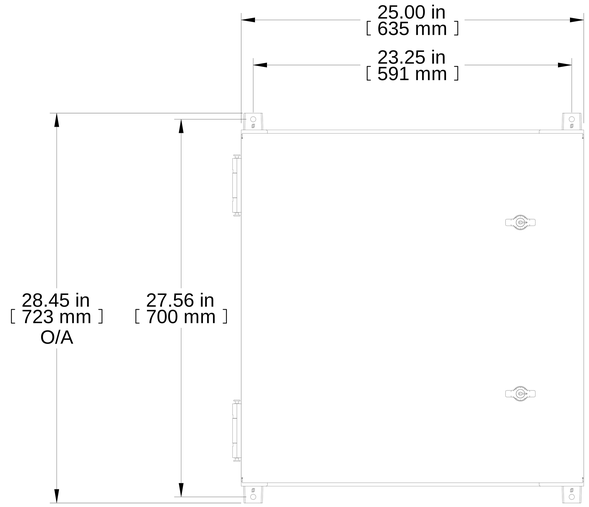

FRONT VIEW

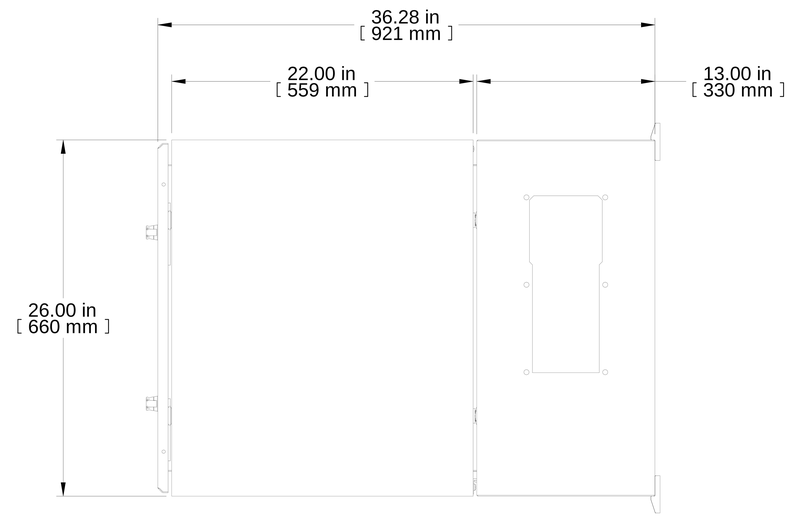

R.S. VIEW

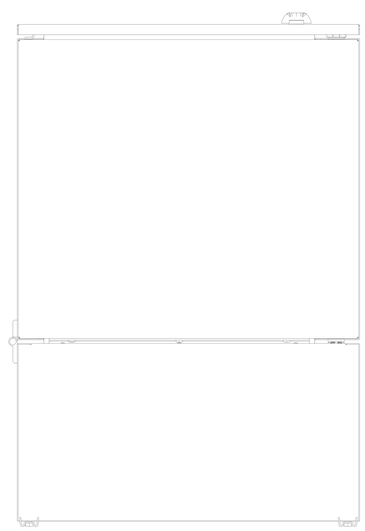

BOTTOM VIEW

Item Number	Title	Quantity
1	NWM 12U 25W REAR	1
2	NWM 12U 25W CNTR	1
3	NWM - 12U 25W SOLID DOOR	1
4	H1 PANEL RAIL 12U LH	2
5	H1 PANEL RAIL 12U RH	2

PART NUMBERS

NWM12U2536SALG	PAINTED LIGHT GRAY

NOTES

Wall Mounting Hardware Not Included
All Accessories Sold Separately
See Hammond Website for Compatible Accessories

Français

Pour tous les détails sur nos produits,
svp veuillez consulter notre site www.hammondmfg.com

Data subject to change without notice. Isometric drawing not to scale.
Les données sont sujettes à changement sans préavis.

HAMMOND MANUFACTURING®

www.hammondmfg.com

PART NO. NWM12U2536SALG