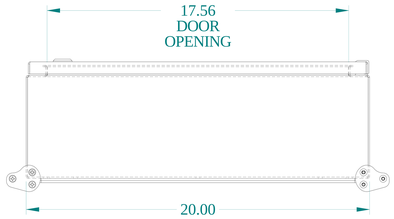

TOP VIEW

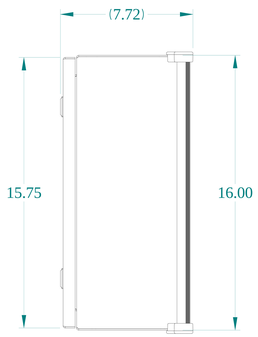

SIDE VIEW

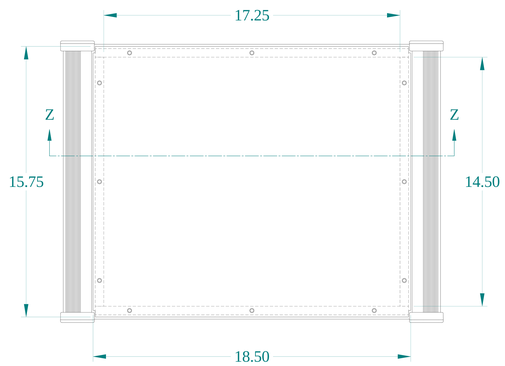

FRONT VIEW

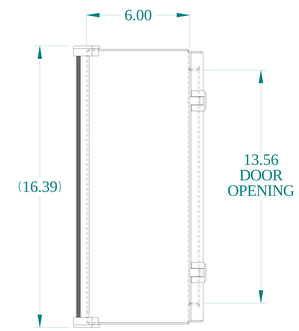

SIDE VIEW

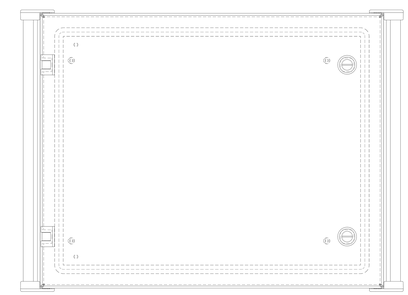

BACK VIEW

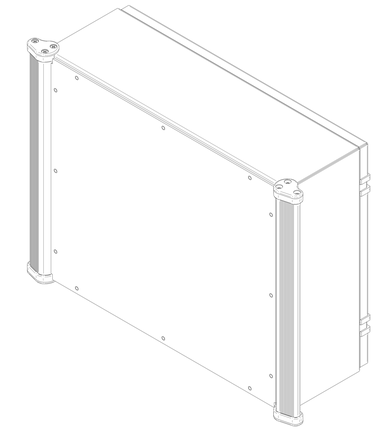

ISOMETRIC VIEWS

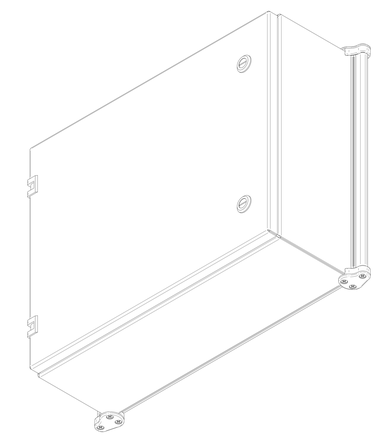

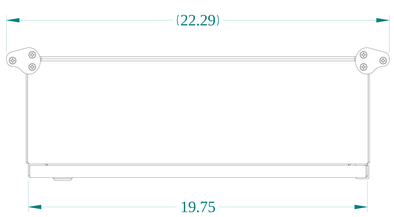

BOTTOM VIEW

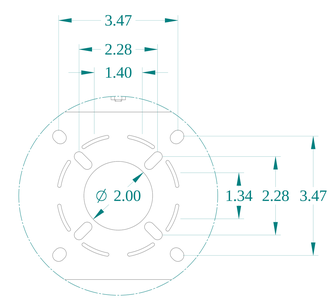

DETAIL Y

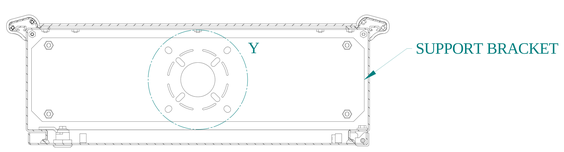

SECTION Z-Z

HAMMOND MANUFACTURING®

www.hammondmfg.com

Data subject to change without notice.

Part # : ACE16206LG	Date : Oct 3, 2023

Link:www.hammfg.com/ACE16206LG