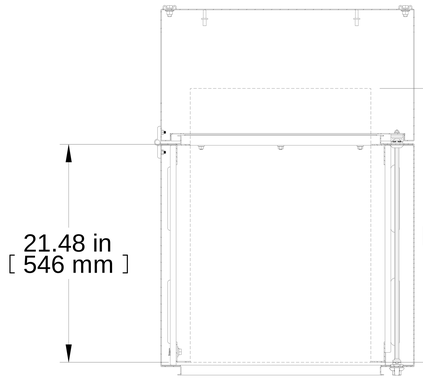

SECTION A-A

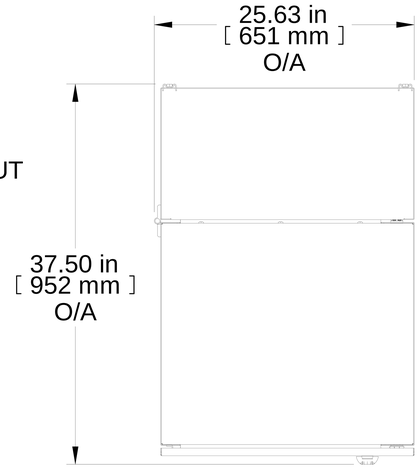

TOP VIEW

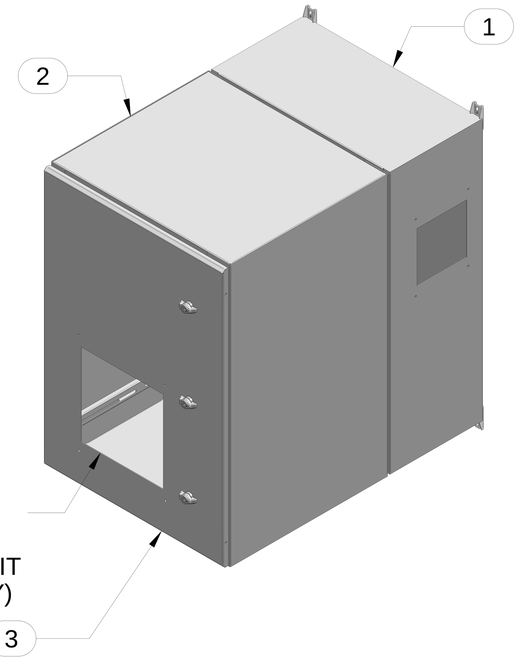

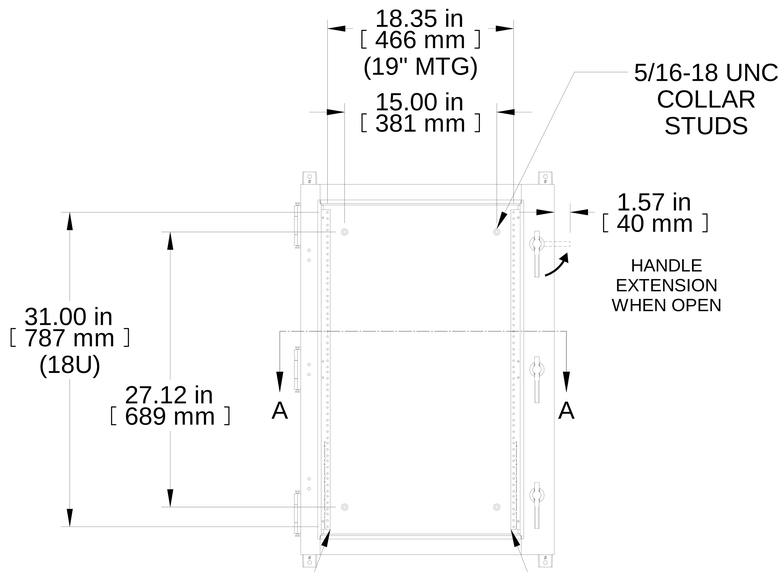

FRONT VIEW
DOOR REMOVED

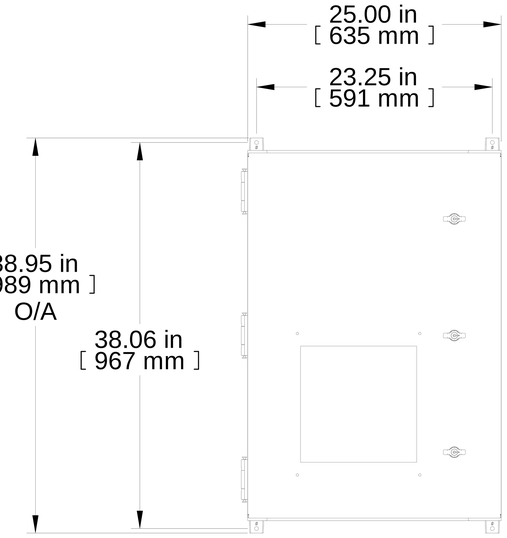

FRONT VIEW

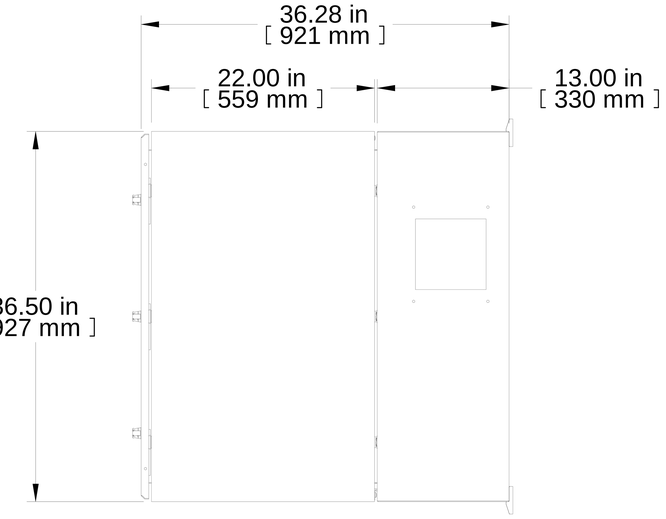

R.S. VIEW

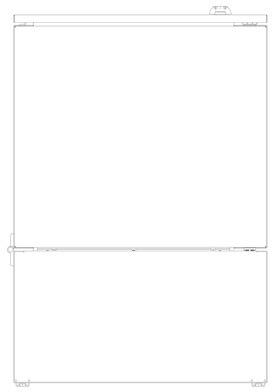

BOTTOM VIEW

Item Number	Title	Quantity
1	NWM 18U 25W REAR	1
2	NWM 18U 25W CNTR	1
3	NWM - 18U 25W FILTER DOOR	1
4	H1 PANEL RAIL 18U LH	2
5	H1 PANEL RAIL 18U RH	2

PART NUMBERS

NWM18U2536SFLG	PAINTED LIGHT GRAY

NOTES

Wall Mounting Hardware Not Included
All Accessories Sold Separately
See Hammond Website for Compatible Accessories

Français

Pour tous les détails sur nos produits,
svp veuillez consulter notre site www.hammondmfg.com
Data subject to change without notice. Isometric drawing not to scale.
Les données sont sujettes à changement sans préavis.

HAMMOND MANUFACTURING®

www.hammondmfg.com

PART NO. NWM18U2536SFLG