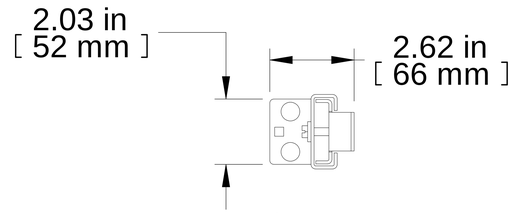

TOP VIEW

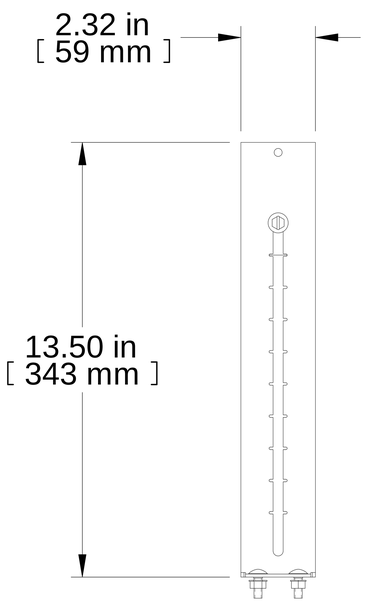

L.S. VIEW

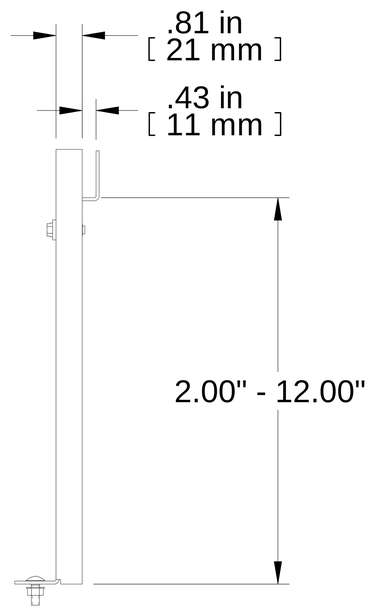

FRONT VIEW

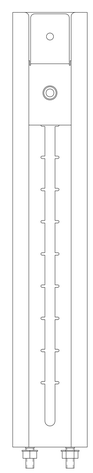

R.S. VIEW

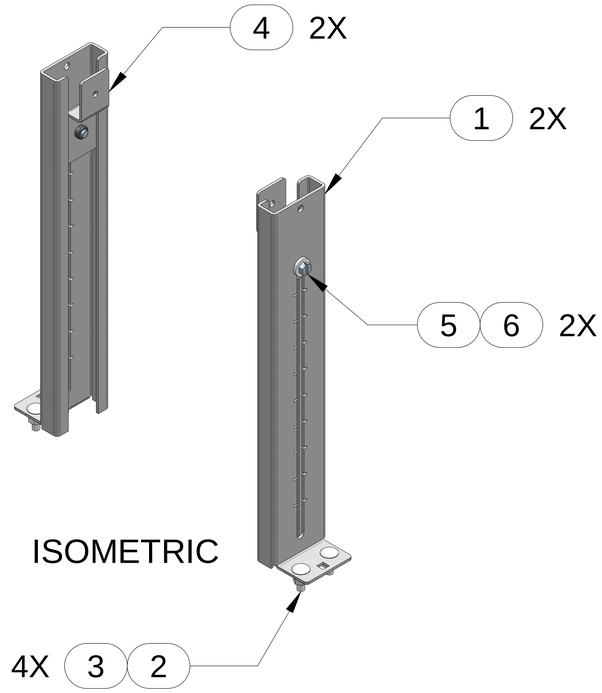

ISOMETRIC

BOTTOM VIEW

Item Number	Title
1	CLEK - ELEVATION POST BRKT
2	SCR 1/4-20X3/4 BLT CARRIAGE SS
3	NUT 1/4-20 KEP
4	CLEK - MOUNTING CLAMP
5	1/4-20 X 1 HEX BOLT
6	1/4-20 SEALING WASHER NEO/STL

PART NUMBERS

CLEK1BK	PAINTED BLACK

NOTES

Notes
Sold in pairs
Assembly hardware included
Mounting hardware included
See Hammond Website for additional info.

Français

Pour tous les détails sur nos produits,
svp veuillez consulter notre site www.hammondmfg.com

Data subject to change without notice. Isometric drawing not to scale.
Les données sont sujettes à changement sans préavis.

HAMMOND MANUFACTURING®

www.hammondmfg.com

PART NO. **CLEK1BK**