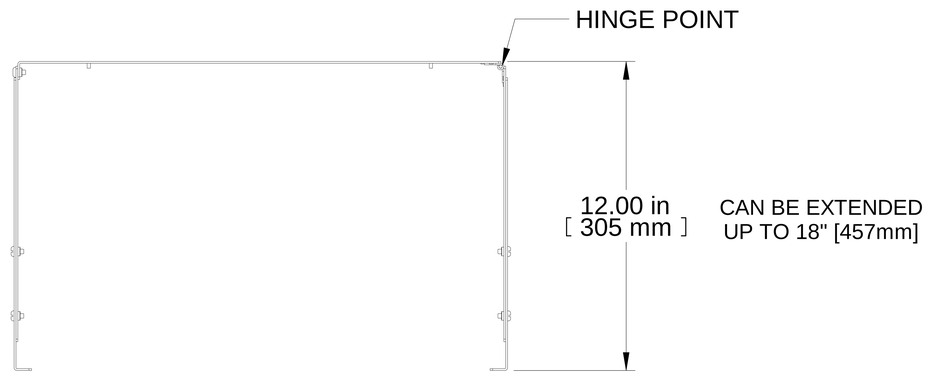

TOP VIEW

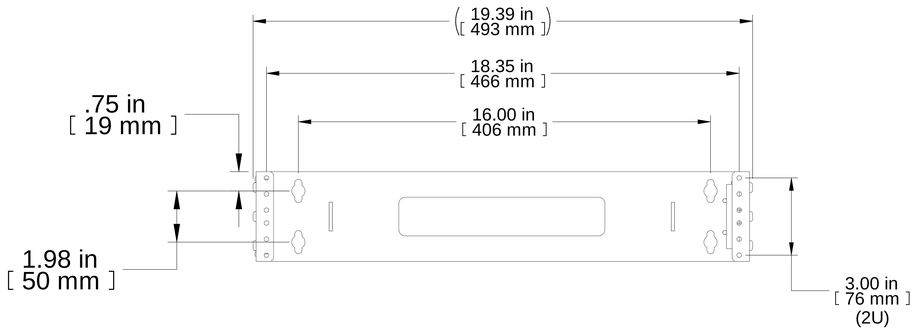

FRONT VIEW

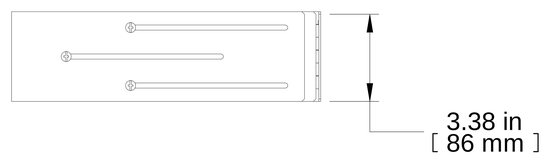

R.S. VIEW

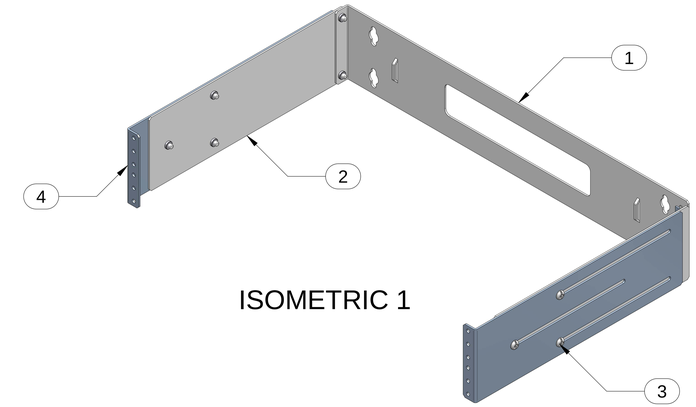

ISOMETRIC 1

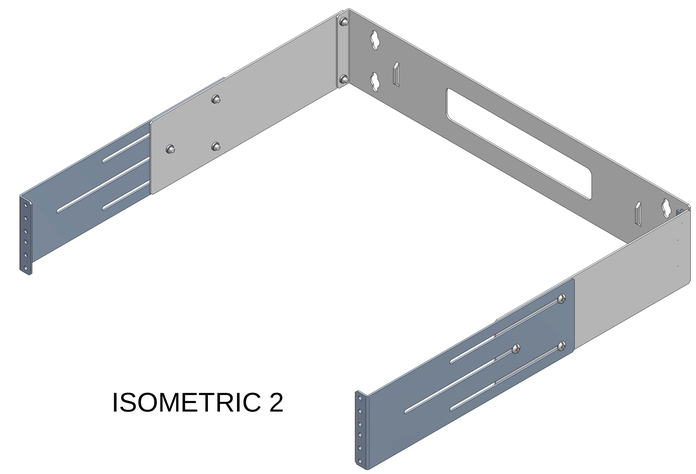

ISOMETRIC 2

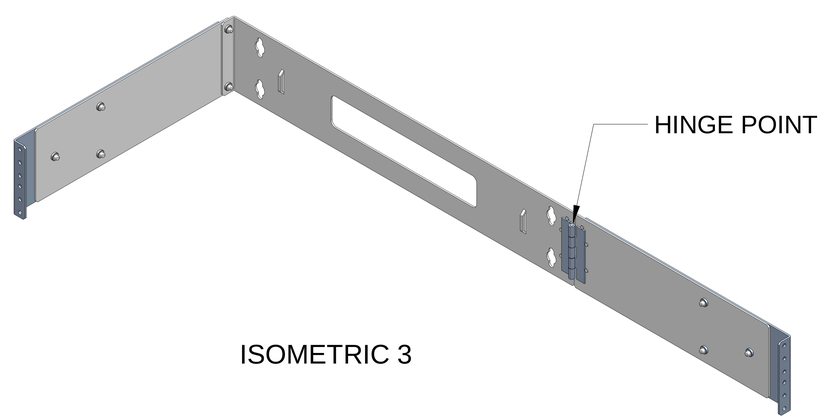

ISOMETRIC 3

Item Number	Title	Quantity
1	ADJUSTABLE PANEL BRACKET ASS'Y	1
2	APB 2U PEM SIDE PANEL	1
3	SCREW 10-32 X 3/8 BDHD SLZP	8
4	APB 2U TAPPED SLIDE RAIL	2

PART NUMBERS	
APB19003BK1	PAINTED BLACK

Adjustable depth from 12" to 18". [305mm to 457mm]
Wall mounting hardware "not included".
Equipment mounting hardware supplied
Made from 14 GA steel.
Design and material changed (2017)

Data subject to change without notice. Isometric drawing not to scale.
Les données sont sujettes à changement sans préavis.

HAMMOND MANUFACTURING®

www.hammondmfg.com

PART NO. **APB19003BK1**