THIS DRAWING IS UNPUBLISHED. RELEASED FOR PUBLICATION 20
© COPYRIGHT 20 BY - ALL RIGHTS RESERVED.

REVISIONS

P	LTR	DESCRIPTION	DATE	DWN	APVD
	A	INITIAL RELEASED	08JUN2021	BP	CW

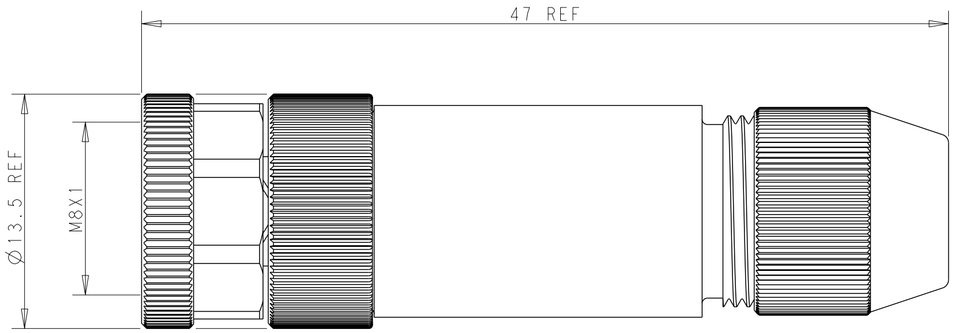

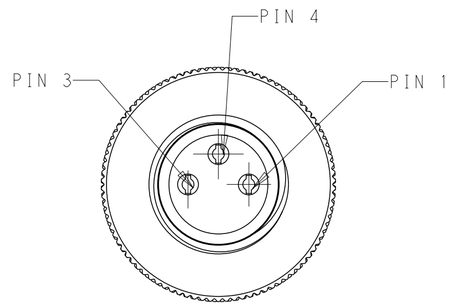

3POS

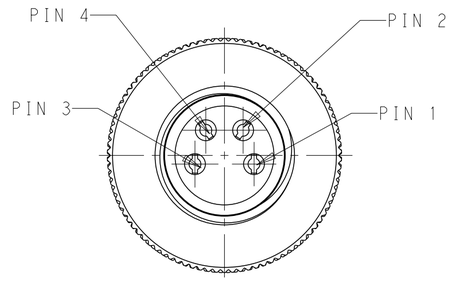

4POS

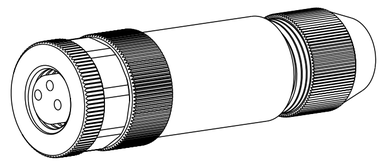

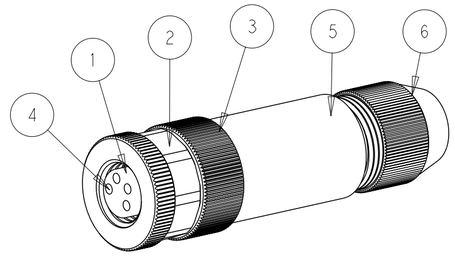

TECHNICAL DATA	T401001904X-000	T401001903X-000
RATED VOLTAGE	30V	60V
RATED CURRENT	3A	3A
POLLUTION DEGREE	3	3
OVERVOLTAGE CATEGOYR	II	II
MATERICAL GROUP	II	II
INSULATION RESISTANCE	>100MΩ	>100MΩ
DEGREE OF PROTECTION	IP67	IP67
OPERATION TEMPERATURE	-40~85°C	-40~85°C

NOTES;

1. PARTS MATERIAL DATA:SEE TABLE1
2. CONTACT FINISH:
   GOLD OVER NICKEL OR SILVER OVER NICKEL
3. CABLE WIRES:
   26AWG/0.14mm^2 Min & 24AWG/0.25mm^2 Max
4. ALL DIMENSIONS ARE FOR NOMINAL REFERENCE ONLY UNLESS OTHERWISE STATE
5. PACKAGIN: 1 PIECE IN A BAG
6. PN INFORMATION FOR ASSEMBLY PARTS

T401001XXXX-000

- CONTACT FINISH:
  1:GOLD OVER NICKEL
  2:SILVER OVER NICKEL
- NUMBERS OFPINS:
  03:3 PINS
  04:4 PINS
  ...
- CABLE OUTLET:
  8:PLASTIC(CABLE FEED:3.5~4.8mm)
  9:METAL(CABLE FEED:3.5~5.0mm)
  ...

注意事项;

1.零件材料参见附表1
2.表面处理:镀金
3.适用线材:26AWG/0.14mm2 Min &
24AWG/0.25mm2 Max
4.所有尺寸标注为基本参考,除非其它说明
5.包装:每BAG装1PC
6.料号数字代码参考上表

TABLE 1

MATERIAL	DESCRIPTION	ITEM
BRASS	PRESS SCREW	6
BRASS	STRAIGHT METAL HOUSING	5
BRASS	M8 SCTREW ASSY REC TERMINAL	4
BRASS	M8 SCREW ASSY OUT SCREW	3
BRASS	M8,FEMALE INSERT NUT	2
PA	M8,FEMALE HSG,A CODE,4PIN	1
	M8,FEMALE HSG,A CODE,3PIN	

PRODUCT TYPE	TE PN	ENTRELEC PN
M8-FS-3CON-PG7-SHU	T4010019031-000	1SET310003R0000
M8-FS-4CON-PG7-SHU	T4010019041-000	1SET310004R0000

THIS DRAWING IS A CONTROLLED DOCUMENT.

DIMENSIONS: mm

TOLERANCES UNLESS OTHERWISE SPECIFIED:
0 PLC ±-
1 PLC ±0.20
2 PLC ±0.20
3 PLC ±0.20
4 PLC ±-
ANGLES ±-

MATERIAL - -
FINISH - -

DWN BLAZE PENG 08JUN2021
CHK KEVIN HUANG 08JUN2021
APVD CHRIS WANG 08JUN2021
PRODUCT SPEC 108-106140
APPLICATION SPEC 114-137144-1
WEIGHT -

ENTRELEC Electrical Solutions

NAME: M8 FEMALE SCREW ASSY STRAIGHT SHIELDING CONNECTOR -

SIZE A2 | CAGE CODE - | DRAWING NO ©-1SET310F02R0000 | RESTRICTED TO -

CUSTOMER DRAWING | SCALE 2:1 | SHEET 1 OF 1 | REV A