THIS DRAWING IS UNPUBLISHED. RELEASED FOR PUBLICATION 20
© COPYRIGHT 20 BY - ALL RIGHTS RESERVED.

REVISIONS

P	LTR	DESCRIPTION	DATE	DWN	APVD
	A	INITIAL RELEASE	09JUN2021	G.W	C.W

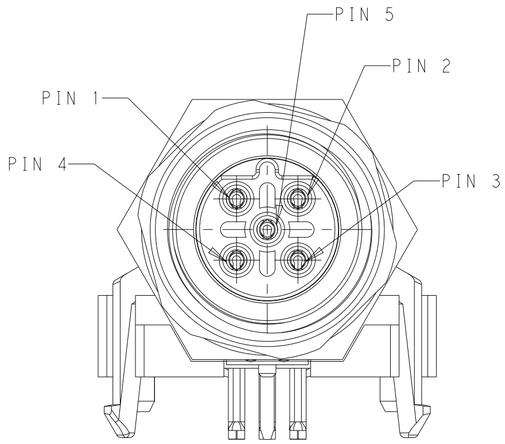

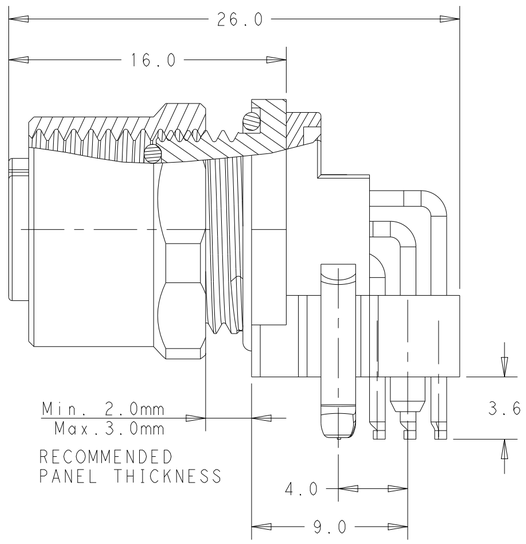

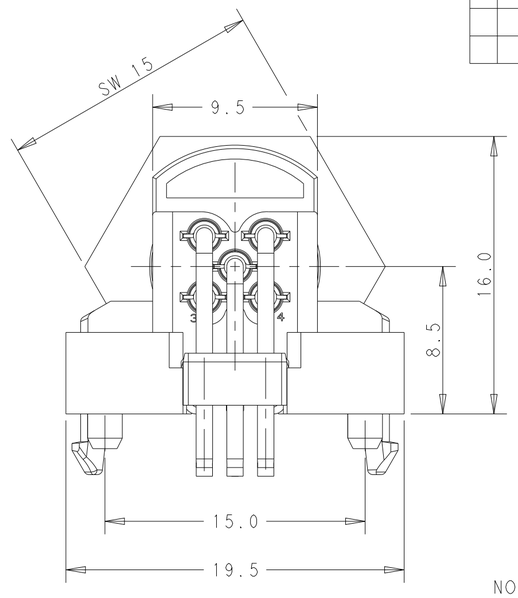

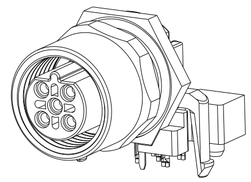

NOTES:

1. TECHNICAL DATA: SEE TABLE 1
2. PIN ARRANGEMENT: SEE TABLE 2
3. RECOMMEND TORQUE 0.6Nm
4. ALL DIMENSIONS ARE FOR NOMINAL REFERENCE ONLY UNLESS OTHERWISE STATED

注意事项
1. 技术参数：见表1
2. PIN 针排布见表2；
3. 推荐扭矩0.6Nm；
4. 所有尺寸仅供参考，除非另有说明

TABLE 1

TECHNICAL DATA	T4145435021-001	T4145435031-001	T4145435041-001	T4145435051-001
RATED VOLTAGE	250V	250V	250V	60V
RATED CURRENT	4A	4A	4A	4A
POLLUTION DEGREE	3	3	3	3
OVERVOLTAGE CATEGORY	II	II	II	II
MATERIAL GROUP	II	II	II	II
INSULATION RESISTANCE	>100MΩ	>100MΩ	>100MΩ	>100MΩ
DEGREE OF PROTECTION	IP67	IP67	IP67	IP67
OPERATION TEMPERATURE	-40~85°C	-40~85°C	-40~85°C	-40~85°C

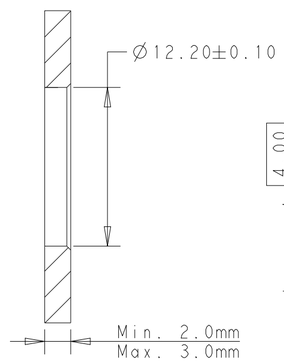

RECOMMENDED
PANEL SIZE

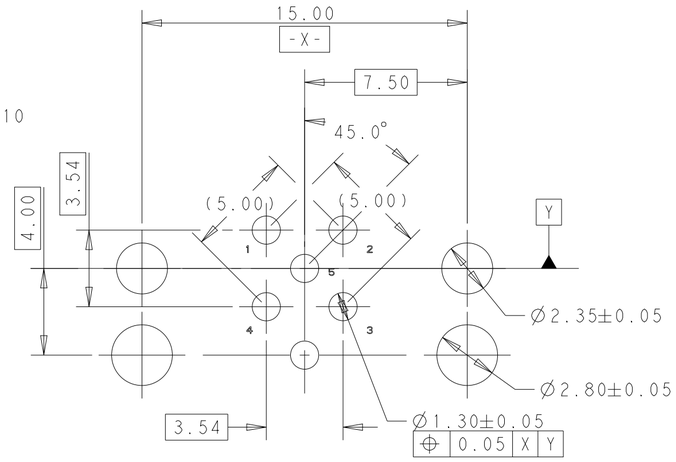

RECOMMENDED PCB LAYOUT
PCB THICKNESS:1.6mm

	COPPER ALLOY	SHIELDING	8
	PA66	SPACER	7
-	COPPER ALLOY	NUT	6
	PRUBBER	O-RING	5
-	COPPER ALLOY	COUPLING NUT	4
	RUBBER	O-RING	3
BALCK COLOR	PA66	HOUSING	2
GOLD FLASH	COPPER ALLOY	CONTACT	1
COMMENTS	MATERIAL	DESCRIPITON	ITEM

TABLE 2

PIN ARRANGEMENT
D-CODE

T4145435021-001	T4145435031-001	T4145435041-001	T4145435051-001
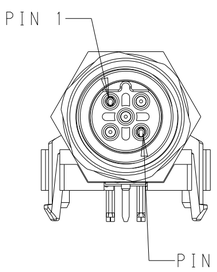	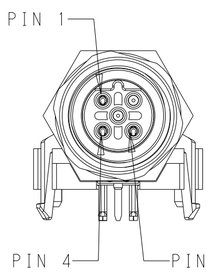	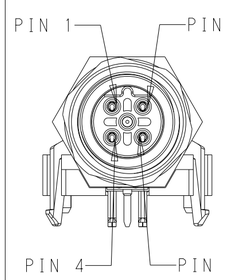	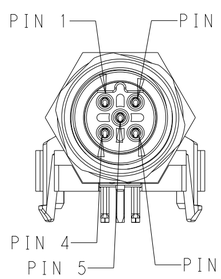

M12B-FRS-5CON-M12-LPSU	T4145435051-001	1SET311027R0000
DESCRIPTION	TE PN	ENTRELEC PN

THIS DRAWING IS A CONTROLLED DOCUMENT.

DIMENSIONS: mm

TOLERANCES UNLESS OTHERWISE SPECIFIED:
0 PLC ±-
1 PLC ±0.25
2 PLC ±0.15
3 PLC ±
4 PLC ±
ANGLES ±-

MATERIAL - -

FINISH - -

DWN GAVIN WANG 09JUN2021
CHK KEVIN HUANG 09JUN2021
APVD CHRIS WANG 09JUN2021
PRODUCT SPEC -
APPLICATION SPEC -
WEIGHT -

ENTRELEC
Electrical Solutions

NAME
M12 RECEPTACLE CONNECTOR, PCB ASSEMBLY, ANGLED, SHIELDED,B-CODE
-

SIZE	CAGE CODE	DRAWING NO	RESTRICTED TO
A2	-	C-1SET311P03R0000	-

CUSTOMER DRAWING | SCALE 2:1 | SHEET 1 OF 1 | REV A

1471-9 (3/13)