THIS DRAWING IS UNPUBLISHED. RELEASED FOR PUBLICATION 20
© COPYRIGHT 20 BY - ALL RIGHTS RESERVED.

| ITEM | DESCRIPTION | MATERIAL | OTHERS |
|---|---|---|---|
| 1 | MALE CONTACT | COPPER ALLOY | GOLD PLATED |
| 2 | HOUSING | NYLON | BLACK |
| 3 | COUPLING NUT | COPPER ALLOY | NICKEL PLATED |
| 4 | OVER-MOLDING | PVC/TPU | BLACK |
| 5 | SHIELDED SHELL | COPPER ALLOY | NICKEL PLATED |
| 6 | CABLE | PVC/PUR JACKET | GRAY/VIOLET |
| 7 | LABEL | - | - |

REVISIONS

| P | LTR | DESCRIPTION | DATE | DWN | APVD |
|---|---|---|---|---|---|
| | A | INITIAL RELEASE | 08JUN2021 | BP | CW |

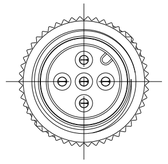

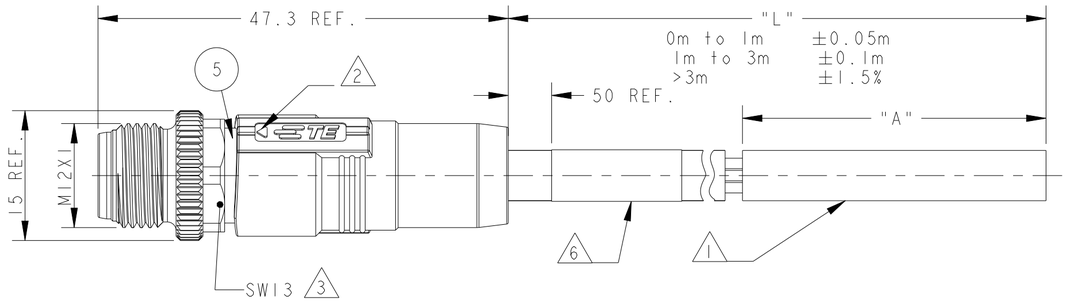


NOTE:
1. STRIP AND RETAIN THE INSULATION
2. CODE POSITION INDICATOR
3. RECOMMENDED TORQUE 0.6 Nm
4. -**:CABLE LENGTH,FOR EXAMPLE:-0.5M
5. CABLE ASSEMBLY TO BE PACKAGED IN POLYBAGS
6. LABEL CONTAINS: PN, DATE CODE...

注释：
1. 剥线并保留护套绝缘层
2. CODE位置指示
3. 推荐扭矩0.6 Nm
4. -**：线缆长度，例如：-0.5M
5. 线缆组件塑料袋包装
6. 标签包含： 产品编号， 日期代码...

## TE PN CODING:

T A X X X X X X X X X - X X X

- TE M12 SERIES
- CODE TYPE: A=A CODE
- POLES NO: 5-5 POS
- CABLE JACKET: 1=PVC MODERATE FLEXIBLE; 5=PUR HIGH FLEXIBLE(DRAG CHAIN)
- OVERMOLDING: 0=BLACK TPU; 1=BLACK PVC
- APPLICATION TYPE: 7=DEVICENET/CANOPEN SHIELDED
- WIRE GAUGE: B=20AWG+ 22AWG DRAIN WIRE
- CABLE JACKET COLOR: 5=VIOLET SIMILAR TO RAL4001; 6=GRAY SIMILAR TO RAL7037
- INTERFACE TYPE: 1=MALE STRAIGHT; 2=MALE ANGLED; 3=FEMALE STRAIGHT; 4=FEMALE ANGLED; 5=MALE STRAIGHT TO FEMALE STRAIGHT; 6=MALE STRAIGHT TO FEMALE ANGLED; A=MALE ANGLED TO FEMALE STRAIGHT
- OTHER ATTRIBUTES: 1=STANDARD SCREW NUT WITH NICKEL PLATED/ STAMPED TERMINAL 30U"AU PLATING
- TYPICAL LENGTH: -001:0.5M; -002:1.0M; -020:2.0M; -040:4.0M; -060:6.0M; -080:8.0M; -007:10.0M; -150:15.0M
- CUSTOMIZATION RULES: -003:1.5M; -004:3.0M; -005:5.0M; -006:7.0M; -99X:0.XM(<1.0M) (-993:0.3M); -XXX:XX.XM(>1.0M) (-155:15.5M)

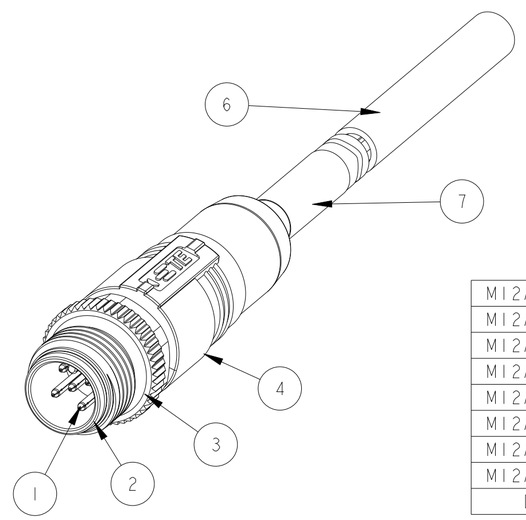


| DESCRIPTION | TE PN | ENTRELEC PN |
|---|---|---|
| M12A5-MS-PVC-0.5M | TAA751A1611-001 | 1SET315057R0000 |
| M12A5-MS-PVC-1.0M | TAA751A1611-002 | 1SET315058R0000 |
| M12A5-MS-PVC-2.0M | TAA751A1611-020 | 1SET315061R0000 |
| M12A5-MS-PVC-4.0M | TAA751A1611-040 | 1SET315062R0000 |
| M12A5-MS-PUR-0.5M | TAA751A5501-001 | 1SET315067R0000 |
| M12A5-MS-PUR-1.0M | TAA751A5501-002 | 1SET315068R0000 |
| M12A5-MS-PUR-2.0M | TAA751A5501-020 | 1SET315070R0000 |
| M12A5-MS-PUR-4.0M | TAA751A5501-040 | 1SET315071R0000 |

| CABLE CHARACTERISTIC | LENGTH "L" | DIMENSION "A" | TYPE | TABLE 2 TE PN |
|---|---|---|---|---|
| WIRES:2X22AWG+2X24AWG +1X22 AWG DRAIN WIRE; WIRE COLOR: WHITE/BLUE/RED/BLACK; OD: APPROX.6.9MM; PUR JACKET,VIOLET; OPERATION TEMPERATURE RATING:80°C UL; OPERATION TEMP RATING: -40°C To +80°C; DRAG CHAIN TEST: MIN. 0.5 MILLION CYCLES,DIAMETER 75MM, SPEED 2m/s,ACCELERATION 2m/s² | TYPICAL LENGTH: -001:0.5M; -002:1.0M; -020:2.0M; -040:4.0M; -060:6.0M; -080:8.0M; -007:10.0M; -150:15.0M; CUSTOMIZATION RULES: -003:1.5M; -004:3.0M; -005:5.0M; -006:7.0M; -99X:0.XM(<1.0M) (-993:0.3M); -XXX:XX.XM(>1.0M) (-155:15.5M) | 35±5 | M12A5-MS-PUR-**4 | TAA751A5501-XXX |
| WIRES:2X22AWG+2X24AWG +1X22 AWG DRAIN WIRE; WIRE COLOR: WHITE/BLUE/RED/BLACK; OD: APPROX.7.1MM; PVC JACKET,GRAY; TEMPERATURE RATING:75°C UL; OPERATION TEMP RATING: -10°C To +80°C | | | M12A5-MS-PVC-**4 | TAA751A1611-XXX |
| | PER CUSTOMER REQUEST: -A01:1.5M | 100±8 | M12A5-MS-PVC-A**4 | TAA751A1611-AXX |

PIN ARRANGEMENT
A-CODE

| | | |
|---|---|---|
| PIN 4 | CAN_H | WHITE |
| PIN 5 | CAN_L | BLUE |
| PIN 1 | DRAIN | BARE |
| PIN 3 | V- | BLACK |
| PIN 2 | V+ | RED |

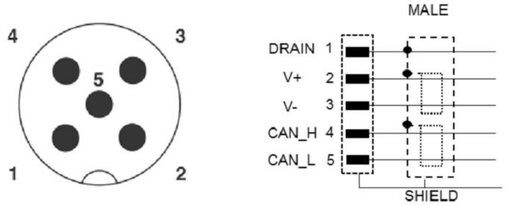


| TABLE 1 TECHNICAL DATA | TAA751A1611-XXX | TAA751A5501-XXX |
|---|---|---|
| RATED VOLTAGE | 60V | |
| RATED IMPULSE VOLTAGE | 1500V | |
| RATED CURRENT | 4A | |
| POLLUTION DEGREE | 3 | |
| OVERVOLTAGE CATEGORY | II | |
| MATERIAL GROUP | II | |
| DEGREE OF PROTECTION | IP67 | |

THIS DRAWING IS A CONTROLLED DOCUMENT.

DIMENSIONS: mm

TOLERANCES UNLESS OTHERWISE SPECIFIED:
0 PLC ±-
1 PLC ±-
2 PLC ±-
3 PLC ±-
4 PLC ±-
ANGLES ±-

MATERIAL - -
FINISH - -

DWN BLAZE PENG 08JUN2021
CHK KEVIN HUANG 08JUN2021
APVD CHRIS WANG 08JUN2021
PRODUCT SPEC 108-106140
APPLICATION SPEC 114-137144
WEIGHT -

ENTRELEC
Electrical Solutions

NAME: M12 A CODE CABLE ASSY,SHIELDED 5P,MS FREE END

SIZE A2 | CAGE CODE - | DRAWING NO ©-1SET311A01R0000 | RESTRICTED TO

RESTRICTED CUSTOMER | SCALE 2:1 | SHEET 1 OF 1 | REV A

1471-9 (3/13)