THIS DRAWING IS UNPUBLISHED. RELEASED FOR PUBLICATION 20
© COPYRIGHT 20 BY - ALL RIGHTS RESERVED.

ITEM	DESCRIPTION	MATERIAL	OTHERS
1	FEMALE CONTACT	COPPER ALLOY	GOLD PLATED
2	HOUSING	NYLON	BLACK
3	COUPLING NUT	COPPER ALLOY	NICKEL PLATED
4	OVER-MOLDING	PVC/TPU	BLACK
5	SHIELDED SHELL	COPPER ALLOY	NICKEL PLATED
6	O-RING	SILICONE	GRAY
7	CABLE	PVC/PUR JACKET	GRAY/VIOLET
8	LABEL	-	-

REVISIONS

P	LTR	DESCRIPTION	DATE	DWN	APVD
	A	INITIAL RELEASE	08JUN2021	BP	CW

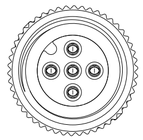

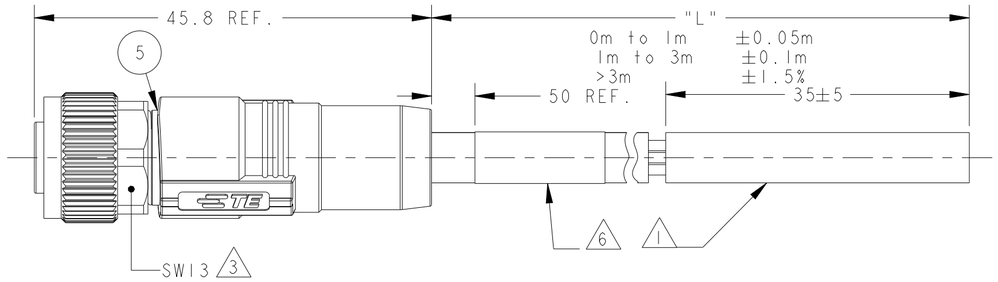

NOTE:
1. STRIP AND RETAIN THE INSULATION
2. CODE POSITION INDICATOR
3. RECOMMENDED TORQUE 0.6 Nm
4. -**:CABLE LENGTH,FOR EXAMPLE:-0.5M
5. CABLE ASSEMBLY TO BE PACKAGED IN POLYBAGS
6. LABEL CONTAINS: PN, DATE CODE...

注释：
1. 剥线并保留护套绝缘层
2. CODE位置指示
3. 推荐扭矩0.6 Nm
4. -**:线缆长度,例如:-0.5M
5. 线缆组件塑料袋包装
6. 标签包含： 产品编号， 日期代码...

TE PN CODING:

T A X X X X X X X X X - X X X

- TE MI2 SERIES
- CODE TYPE: A=A CODE
- POLES NO: 5-5 POS
- APPLICATION TYPE: 7=DEVICENET/CANOPEN SHIELDED
- WIRE GAUGE: B=20AWG+ 22AWG DRAIN WIRE
- CABLE JACKET: 1=PVC MODERATE FLEXIBLE; 5=PUR HIGH FLEXIBLE(DRAG CHAIN)
- INTERFACE TYPE:
  1=MALE STRAIGHT
  2=MALE ANGLED
  3=FEMALE STRAIGHT
  4=FEMALE ANGLED
  5=MALE STRAIGHT TO FEMALE STRAIGHT
  6=MALE STRAIGHT TO FEMALE ANGLED
  A=MALE ANGLED TO FEMALE STRAIGHT
- CABLE JACKET COLOR:
  5=VIOLET SIMILAR TO RAL4001
  6=GRAY SIMILAR TO RAL7037
- OVERMOLDING: 0=BLACK TPU; 1=BLACK PVC
- OTHER ATTRIBUTES: 1=STANDARD SCREW NUT WITH NICKEL PLATED/ STAMPED TERMINAL 30U"AU PLATING
- TYPICAL LENGTH:
  -001:0.5M
  -002:1.0M
  -020:2.0M
  -040:4.0M
  -060:6.0M
  -080:8.0M
  -007:10.0M
  -150:15.0M
  CUSTOMIZATION RULES:
  -003:1.5M
  -004:3.0M
  -005:5.0M
  -006:7.0M
  -99X:0.XM(<1.0M)
  (-993:0.3M)
  -XXX:XX.XM(>1.0M)
  (-155:15.5M)

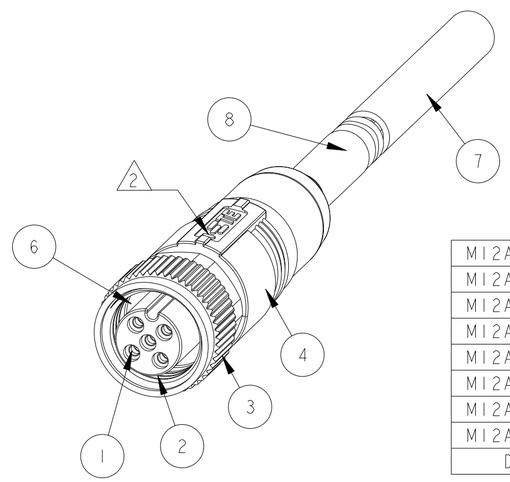

DESCRIPTION	TE PN	ENTRELEC PN
MI2A5-FS-PVC-0.5M	TAA753A1611-001	1SET315091R0000
MI2A5-FS-PVC-1.0M	TAA753A1611-002	1SET315092R0000
MI2A5-FS-PVC-2.0M	TAA753A1611-020	1SET315094R0000
MI2A5-FS-PVC-4.0M	TAA753A1611-040	1SET315095R0000
MI2A5-FS-PUR-0.5M	TAA753A5501-001	1SET315099R0000
MI2A5-FS-PUR-1.0M	TAA753A5501-002	1SET315100R0000
MI2A5-FS-PUR-2.0M	TAA753A5501-020	1SET315102R0000
MI2A5-FS-PUR-4.0M	TAA753A5501-040	1SET315103R0000

CABLE CHARACTERISTIC	LENGTH "L"	TYPE	TABLE 2 TE PN
WIRES:2X22AWG+2X24AWG +1X22 AWG DRAIN WIRE WIRE COLOR: WHITE/BLUE/RED/BLACK OD: APPROX.6.9MM PUR JACKET,VIOLET OPERATION TEMPERATURE RATING:80°C UL OPERATION TEMP RATING: -40°C To +80°C DRAG CHAIN TEST: MIN. 0.5 MILLION CYCLES,DIAMETER 75MM, SPEED 2m/s,ACCELERATION 2m/s²	TYPICAL LENGTH: -001:0.5M -002:1.0M -020:2.0M -040:4.0M -060:6.0M -080:8.0M -007:10.0M -150:15.0M CUSTOMIZATION RULES: -003:1.5M -004:3.0M -005:5.0M -006:7.0M -99X:0.XM(<1.0M) (-993:0.3M) -XXX:XX.XM(>1.0M) (-155:15.5M)	MI2A5-FS-PUR-**4	TAA753A5501-XXX
WIRES:2X22AWG+2X24AWG +1X22 AWG DRAIN WIRE WIRE COLOR: WHITE/BLUE/RED/BLACK OD: APPROX.7.1MM TEMPERATURE RATING:75°C UL OPERATION TEMP RATING: -10°C To +80°C		MI2A5-FS-PVC-**4	TAA753A1611-XXX

PIN ARRANGEMENT
A-CODE

PIN 4	CAN_H	WHITE
PIN 5	CAN_L	BLUE
PIN 1	DRAIN	BARE
PIN 3	V-	BLACK
PIN 2	V+	RED

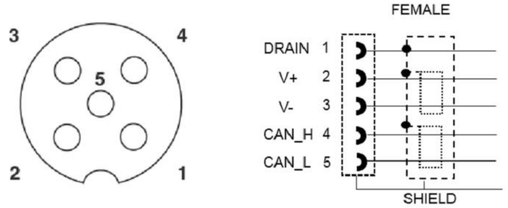

TABLE 1 TECHNICAL DATA	TAA753A1611-XXX	TAA753A5501-XXX
RATED VOLTAGE	60V	
RATED IMPULSE VOLTAGE	1500V	
RATED CURRENT	4A	
POLLUTION DEGREE	3	
OVERVOLTAGE CATEGORY	II	
MATERIAL GROUP	II	
DEGREE OF PROTECTION	IP67	

THIS DRAWING IS A CONTROLLED DOCUMENT.

DIMENSIONS: mm

TOLERANCES UNLESS OTHERWISE SPECIFIED:
0 PLC ±-
1 PLC ±-
2 PLC ±-
3 PLC ±-
4 PLC ±-
ANGLES ±-

MATERIAL - -
FINISH - -

DWN 08JUN2021 BLAZE PENG
CHK 08JUN2021 KEVIN HUANG
APVD 08JUN2021 CHRIS WANG
PRODUCT SPEC 108-106140
APPLICATION SPEC 114-137144
WEIGHT -

ENTRELEC
Electrical Solutions

NAME: MI2 A CODE CABLE ASSY,SHIELDED 5P,FS FREE END

SIZE A2 | CAGE CODE - | DRAWING NO ©-1SET311A03R0000 | RESTRICTED TO

RESTRICTED CUSTOMER | SCALE 2:1 | SHEET 1 OF 1 | REV A

1471-9 (3/13)