© 2022 TE Connectivity. All Rights Reserved.

REVISIONS					
P	LTR	DESCRIPTION	DATE	DWN	APVD
	A1	NEW DRAWING	14AUG2022	ASB	JDB

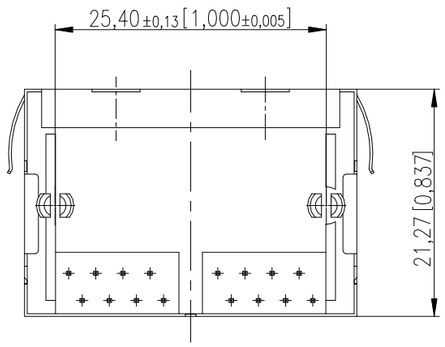

RECOMMENDED PANEL CUTOUT
EMPFOHLENER FRONTPLATTEN–AUSSCHNITT

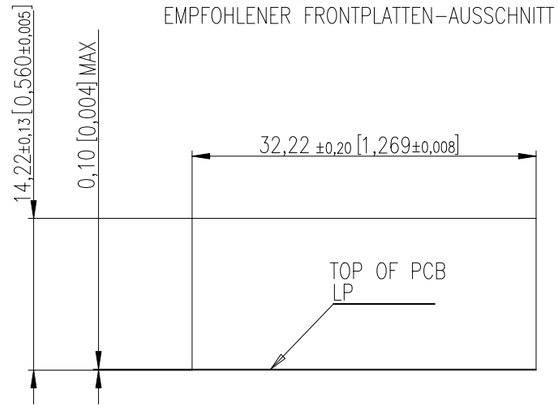

RECOMMENDED PCB LAYOUT (COMPONENT SIDE VIEW)
EMPFOHLENES LEITERPLATTEN–LAYOUT (BESTUECKUNGSSEITE)
TOL.± 0.05 [0.002] UNLESS NOTED

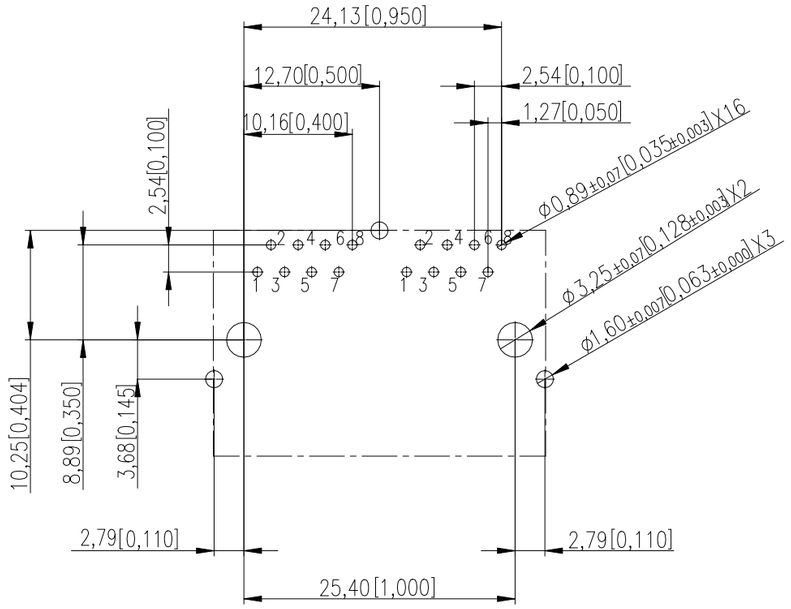

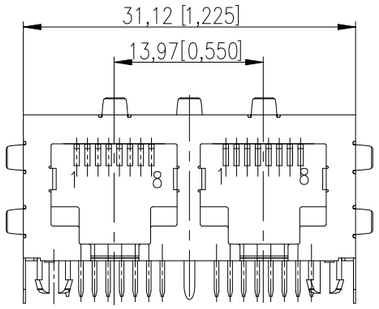

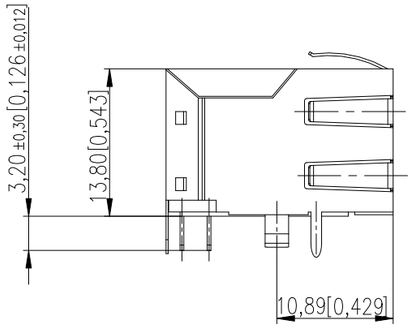

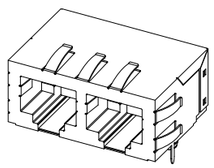

1:1

NOTE 1: PANEL GROUND FLANGES TOP, SIDES (GF5)
NOTE 2: C–UL APPROVED E145613 AND MEETS FCC REQUIREMENTS
NOTE 3: RoHS COMPLIANT

Technical specifications

Materials & Finish	Standard applic.	Value
Insulation body	Standard description	PBT 30%
Contact material	Standard description	C5210 (acc. JIS)
Contact finish, mating zone	Thickness of plating	30 µin Au over 50 µin Ni
Contact finish termination zone	Thickness of plating	80 µin matte Sn over 50 µin Ni
Shell/shield material	Standard description	C2680 (acc. JIS)
Plating shield / shielding pin		50 µin Ni / 80 µin Sn
Assembly process		
Packaging		Tray
Solder temperature		235°C at 3-5s
Suitable assembly process		wave
Approvals		
UL insulation body	UL 94	V0
UL File No.		E145613
RoHS compliant		Yes

Test Data	Standard applic.	Value
Mechanical properties		
Insertion/withdrawal force	IEC 603-7	max. 20 N
Mechanical operations	IEC 512-5, 9a	min. 1,000
Effectiveness of connector coupling device	IEC 512-8, 15f	50 N
Electrical properties		
Creepage / clearance distances		
a) Contact - contact	IEC 807-3	0,52 mm
b) Contact - shell	IEC 807-3	min 1,0 mm
Voltage proof (Dielectric Withstand Voltage)		
a) Contact - contact	IEC 512-2, 4a	min. 1.000 V AC/DC
b) Contact - shell/testpanel	IEC 512-2, 4a	min. 1.500 V AC/DC
Current carrying capacity	IEC 512-3, 5b	1,5 A @ 25° C
Contact resistance	IEC 512-2, 2a	max. 30 mOhm
Insulation resistance	IEC 512-2, 3a	min. 500 MOhm
Environmental properties		
Operation temperature		0 - 70° C

PART NO. IDENT. NR.	TRANSMISSION REQUIREMENT ÜBERTRAGUNGSANFORDERUNG
133208–E	CATEGORY 3/4

THIS DRAWING IS A CONTROLLED DOCUMENT.

DIMENSIONS: mm [INCHES]

TOLERANCES UNLESS OTHERWISE SPECIFIED:
0 PLC ± –
1 PLC ± –
2 PLC ± –
3 PLC ± –
4 PLC ± –
ANGLES ± –

MATERIAL –

FINISH –

DWN	B S ADRUSH	12AUG2022
CHK	N MANTIKOU	14AUG2022
APVD	J DE BRUIJN	14AUG2022
PRODUCT SPEC	108–94901	
APPLICATION SPEC	114–94805	
WEIGHT	–	

TE Connectivity

NAME: MOD JACK–MJR 8P8C. 1X2 –

SIZE	CAGE CODE	DRAWING NO	RESTRICTED TO
A3	00779	C–133208–E	–

CUSTOMER DRAWING

SCALE	SHEET	REV
NTS	1 OF 1	A1