© 2022 TE Connectivity. All Rights Reserved.

REVISIONS

P	LTR	DESCRIPTION	DATE	DWN	APVD
	A1	NEW DRAWING	09NOV2022	ASB	JDB

RECOMMENDED PCB LAYOUT (COMPONENT SIDE VIEW)
EMPFOHLENES LEITERPLATTEN-LAYOUT (BESTUECKUNGSSEITE)
TOL.± 0.05 [0.002] UNLESS NOTED

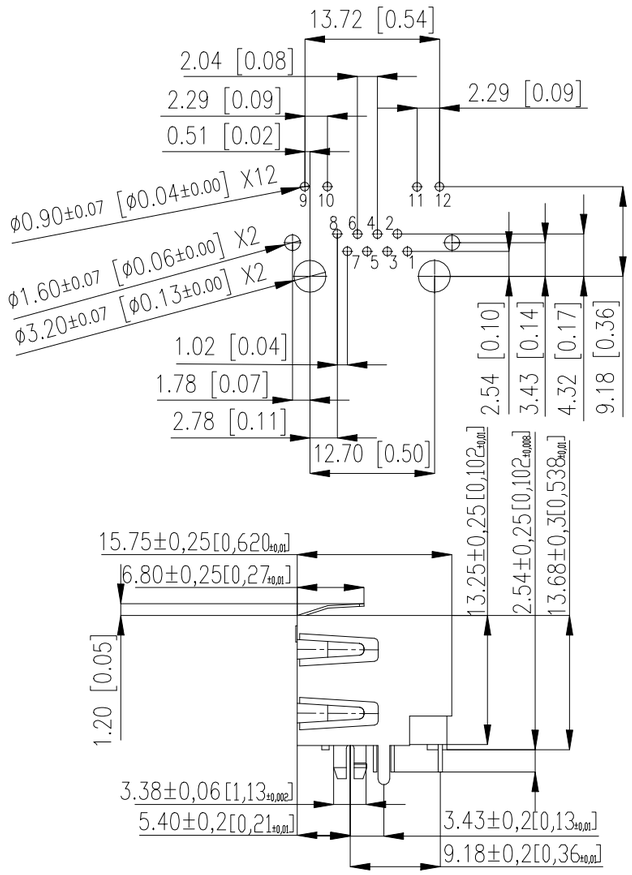

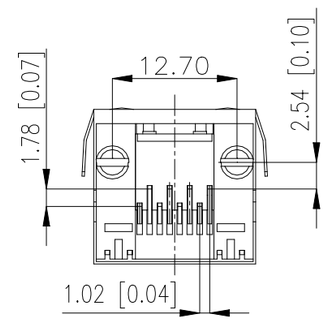

RECOMMENDED PANEL CUTOUT
EMPFOHLENER FRONTPLATTEN-AUSSCHNITT

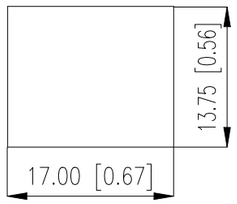

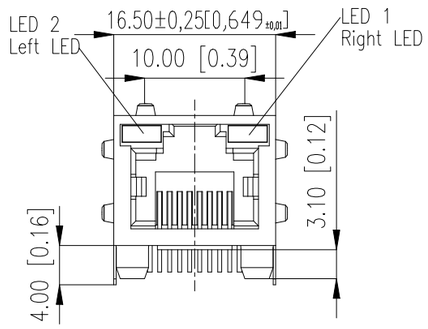

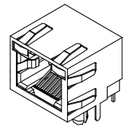

1:1

LED SPECIFICATIONS

COLOR FARBE	Vf TYP	Vf MAX	If mA	CIRCUIT DIAGRAM SCHALTSKIZZE
YELLOW	2.1	2.5	20	9 10 / 11 12
GREEN	2.2	2.5	20	9 10 / 11 12
RED	2.25	2.5	20	9 10 / 11 12
ORANGE / GREEN	2.05 / 2.2	2.5	20	9 10 G N / 11 12 G N
GREEN / ORANGE	2.2 / 2.05	2.5	20	9 10 N G / 11 12 N G

Notes: Cavity confirms to FCC Rules and Regulations Part 68, Subpart F

	NO. IDENT. NR.	LED 2 LEFT	LED 1 RIGHT	LED CODE
	203532-E	YELLOW	GREEN	L1
	203533-E	GREEN	YELLOW	L2
OBSOLET	~~203534-E~~	~~GREEN~~	~~GREEN~~	~~L3~~
	203535-E	YELLOW	YELLOW	L8
OBSOLET	~~203536-E~~	~~ORANGE / GREEN~~	~~ORANGE / GREEN~~	~~L9~~
	203537-E	RED	GREEN	L5
OBSOLET	~~203538-E~~	~~GREEN / ORANGE~~	~~YELLOW~~	~~L11~~

Technical specifications

Materials & Finish

Insulation body	PA46 GF30
Contact material	Phosphor Bronze (C5210)
Contact finish, mating zone	30µin Au
Contact finish, termination zone	Au flash
Underplating	20-50µin Ni
Shell/shield material	C2680 (acc. JIS)
Shell/shield plating	20-50µin Ni

Assembly Process

Packaging	Tray
Solder temperature	260°C at 3-5s
Suitable assembly process	wave

Approvals

UL insulation body	V0
UL File No.	E145613
RoHS compliant	Yes

Mechanical properties	**Std. applicable**		
Insertion/withdrawal force	IEC 603-7	max.	20 N
Mechanical operations	IEC 512-5, 9a	min.	1.000
Effectiveness of connector coupling device	IEC 512-8, 15f		50 N

Electrical properties			
Creepage / clearance distances			
a) Contact - contact	IEC 807-3		0,52 mm
b) Contact - shell	IEC 807-3		min 1,0 mm
Voltage proof (Dielectric Withstand Voltage)			
a) Contact - contact	IEC 512-2, 4a	min.	1.000 V AC/DC
b) Contact - shell/ testpanel	IEC 512-2, 4a	min.	1.500 V AC/DC
Current carrying capacity	IEC 512-3, 5b		1.5 A @ 25°C
Contact resistance	IEC 512-2, 2a	max.	30 mOhm
Insulation resistance	IEC 512-2, 3a	min.	500 MOhm

Environmental properties	
Operation temperature	-40 to +85°C

THIS DRAWING IS A CONTROLLED DOCUMENT.

DIMENSIONS: mm [INCHES]

TOLERANCES UNLESS OTHERWISE SPECIFIED:
0 PLC ± –
1 PLC ± –
2 PLC ± –
3 PLC ± –
4 PLC ± –
ANGLES ± –

MATERIAL –
FINISH –

DWN	B S ADRUSH	07NOV2022
CHK	N MANTIKOU	09NOV2022
APVD	J DE BRUIJN	09NOV2022
PRODUCT SPEC	108-94901	
APPLICATION SPEC	114-94805	
WEIGHT	–	

TE Connectivity

NAME: MOD JACK- MJE 8P8C, 1X1, LED –

SIZE	CAGE CODE	DRAWING NO	RESTRICTED TO
A3	00779	C-203532-E	–

CUSTOMER DRAWING | SCALE NTS | SHEET 1 OF 1 | REV A1