© 2023 TE Connectivity. All Rights Reserved.

REVISIONS					
P	LTR	DESCRIPTION	DATE	DWN	APVD
	A1	NEW DRAWING	27NOV2023	NK	JDB
	B1	DRAWING RE-CREATED IN CREO	22DEC2023	NK	JDB
	B2	NOTES AND TOLERANCES UPDATE	05APR2024	NK	JDB
	B3	REEL CORE DIA CHANGE	08AUG2024	SS	LET

TAPE ON REEL PACKAGING ACCORDING TO DIN IEC 60286-3
PACKAGING UNIT: 80 PCS

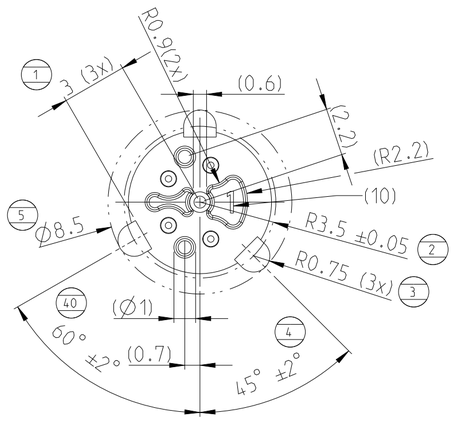

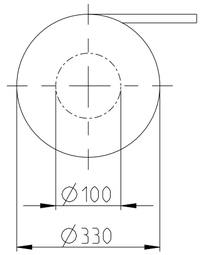

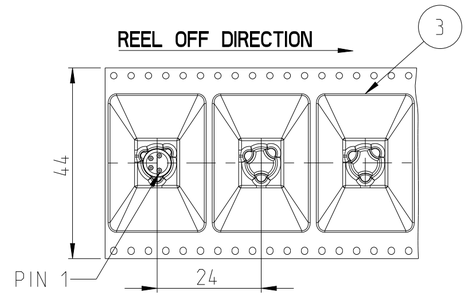

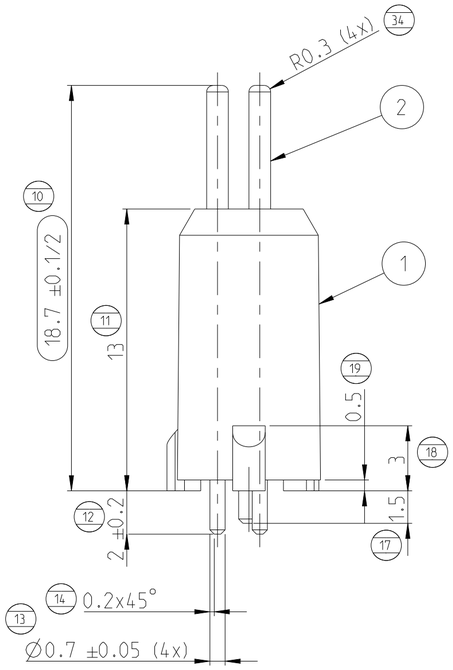

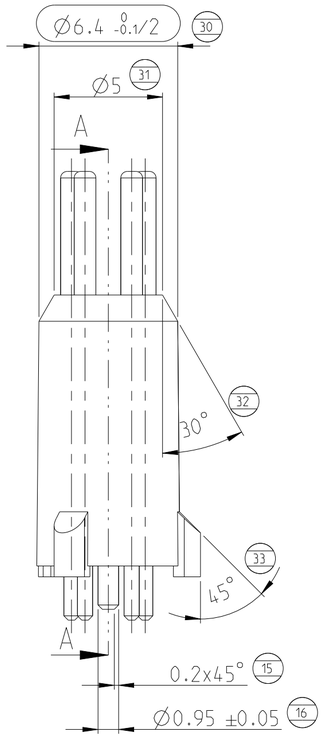

SECTION A-A

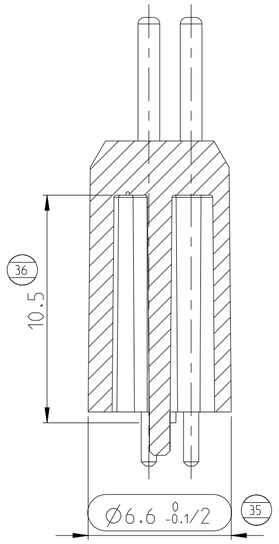

1) SUCTION SURFACE WITHOUT BURRS AND GROOVES RA 1.15 µm

2) EJECTOR MARKING RECESSED

3) NON-DIMENSIONED DRAFT ANGLES AS SHOWN. OTHERWISE WITHIN DIMENSIONAL TOLERANCES

4) TEST DIMENSIONS ROUNDED OVAL

5) AREA FOR INJECTION MARKING: MAX.: 0.15 PROTRUDING OVER THE CONTOUR

6) TOLERANCES
LENGTHS SN 56570 - 130
MASS <0.5mm: ±0.05
ANGLE, SHAPE AND POSITION TOLERANCES: DIN ISO 2768-mH
SYMMETRY: 0.2 ACCORDING TO DIN EN ISO 1101

7) UNDIMENSIONED RADII R 0.3

8) PIN SURFACE: 0.76 µm Au OVER 1.27 µm Ni MIN.
ALTERNATIVE SURFACE: 0.76 µm pd (INCL. Au-FLASH) MIN.
OVER 1.27 µm Ni MIN.

9) TAPING ACCORDING TO DIN EN 60286-3

10) CAVITY MARKING IDENTIFICATION AREA

11) LCP VECTRA E 130 I BLACK 704129-2

12) DRAWING SPECIFICATION ACCORDING TO 5_3_16-DOC-1806-00915

13) TOLERANCES OF SHAPE AND POSITION ACCORDING TO ISO 2768-2: 1989 CLASS H

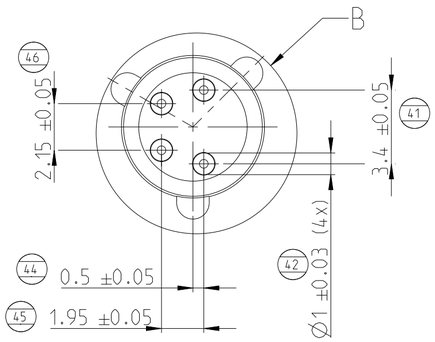

DETAIL B
SCALE 5:1

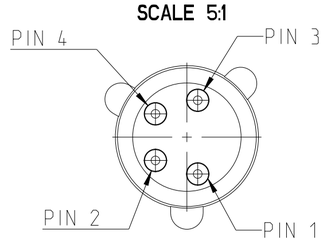

SCALE 1:1
3D VIEW

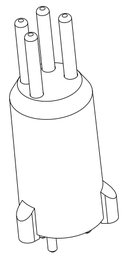

CUSTOMER ID: A5E31738607A

QTY	REV OF EACH ASSY NO. (WHEN BLANK, USE DWG. REV)	PARTS LIST	
225499-E	REV	DESCRIPTION	ITEM NO.
1	-	M8 HOUSING	1
4	-	PINS	2
1	-	TAPE AND REEL	3

INSPECTION LEVEL 1: CONTROL CHART REQUIRED
/1 PROOF OF PROCESS CAPABILITY OR 100% TEST IF PROCESS CAPABILITY IS NOT ACHIEVED

INSPECTION LEVEL 2 AND 3: CONTROL CHART REQUIRED
/2 PROOF OF MEAN VALUE, STANDARD DEVIATION AND MACHINE CAPABILITY

/3 PROOF OF VALUES OR PROOF OF ATTRIBUTIVE TEST

THIS DRAWING IS A CONTROLLED DOCUMENT.

DIMENSIONS: mm

TOLERANCES UNLESS OTHERWISE SPECIFIED: ISO 2768-1: 1989 m ISO 8015
0 PLC ±
1 PLC ±
2 PLC ±
3 PLC ±
4 PLC ±
ANGLES ±

MATERIAL - -
FINISH -

DWN	N K NIKHIL	22AUG2023
CHK	M SZELAG	24AUG2023
APVD	J DE BRUIJN	24AUG2023
PRODUCT SPEC	108-94887	
APPLICATION SPEC	114-94781	
WEIGHT	-	

TE Connectivity

NAME: M8 MALE, A CODE, 4P, 13MM, THR
-

SIZE	CAGE CODE	DRAWING NO	RESTRICTED TO
A2	00779	C-225499-E	-

CUSTOMER DRAWING | SCALE 5:1 | SHEET 1 OF 1 | REV B3

1471-9 (3/13)