© 2023 TE Connectivity. All Rights Reserved.

REVISIONS					
P	LTR	DESCRIPTION	DATE	DWN	APVD
	A1	NEW DRAWING	03JUL2023	NK	JDB
	A2	DRAWING RE-CREATED IN CREO	02AUG2023	NK	JDB
	A3	544821-E MOVE TO PRODUCTION	12NOV2024	SS	LET

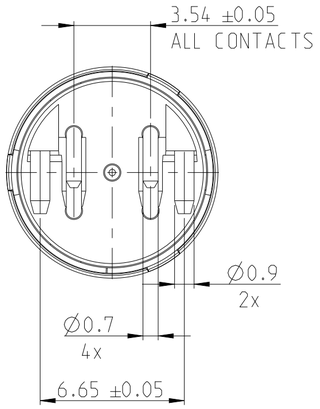

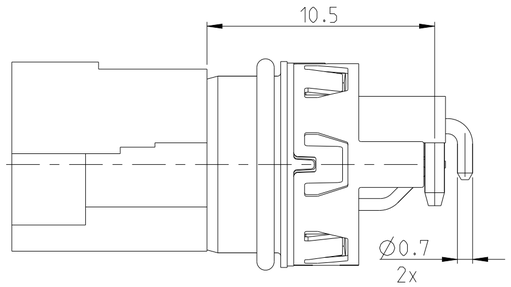

SECTION A-A

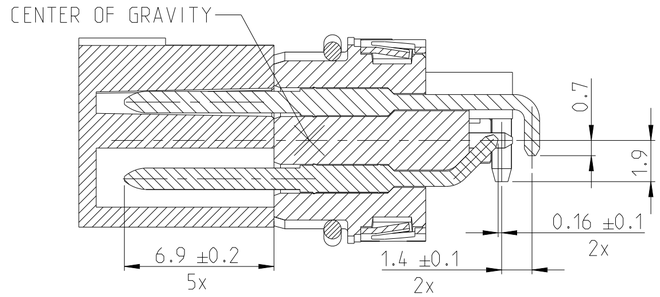

INDICATED WITH HOOD P&P

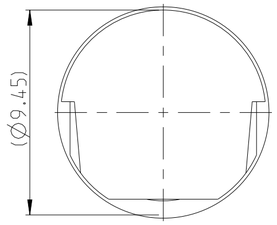

INDICATED WITHOUT HOOD P&P

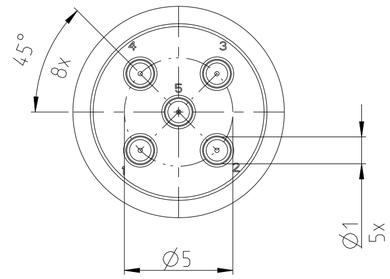

TAPE ON REEL PACKAGING ACCORDING TO DIN IEC 60286-3
PACKAGING UNIT: 250 PCS

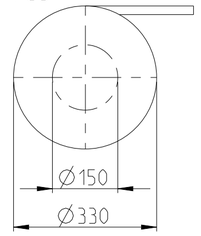

REEL OFF DIRECTION

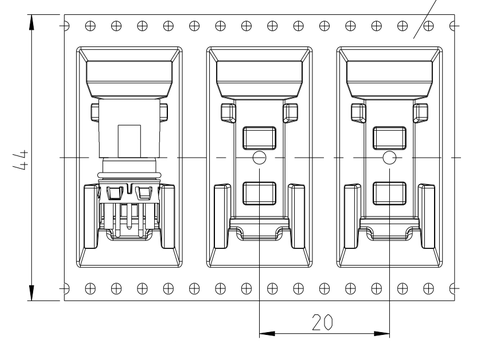

SECTION C-C
VERSION: CONTACT 5 EARLY MATE
INDICATED WITHOUT HOOD P&P

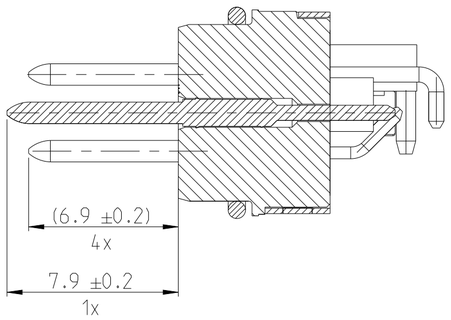

SECTION B-B

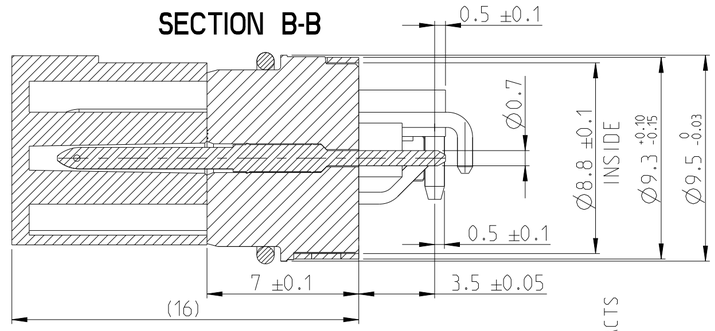

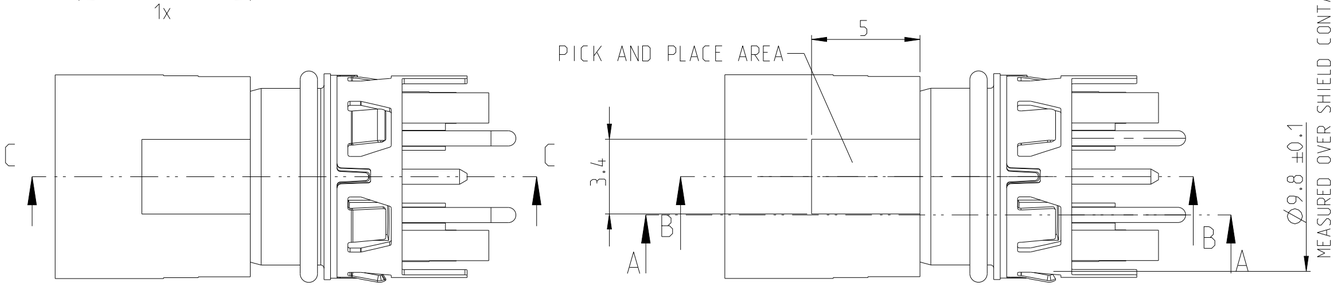

PART NO.	REMARK
XXXXXX	POTTING NOT NEEDED
544821-E	POTTING NOT NEEDED
OBSOLETE ~~225271-E~~	~~POTTING NOT NEEDED~~
OBSOLETE ~~225269-E~~	~~POTTING NOT NEEDED~~
OBSOLETE ~~225268-E~~	~~POTTING NOT NEEDED~~
225266-E	POTTING NOT NEEDED

XXXXXX-E	544821-E	225271-E (1)	225269-E	225268-E (1)	225266-E	REV	DESCRIPTION	ITEM NO.
1	1	1	1	1	1	-	TAPE AND REEL	8
1	1	1	1	1	1	-	HOOD	7
1	-	1	1	-	-	-	SHIELD	6
1	1	-	-	-	-	-	O-RING 7.2x0.8	5
-	-	-	-	-	-	-	O-RING 7.8x0.85	4
2	2	2	2	2	2	-	PIN 3,4	3
3	3	3	3	3	3	-	PIN 1,2,5	2
1	1	1	1	1	1	-	M12 HOUSING	1
-	-	-	-	-	-	REV OF EACH ASSY NO. (WHEN BLANK, USE DWG. REV)		
QTY						PARTS LIST		

1. CONTACT 5 EARLY MATE (FMLB)
2. MATING FACE ACCORDING TO IEC 61076-2-101
3. RECOMMENDED DIMENSION FOR INTEGRATION IN HOUSING ACCORDING TO 114-94782
4. PCB-LAYOUT PROPOSAL ACCORDING TO DOCUMENT 114-94782

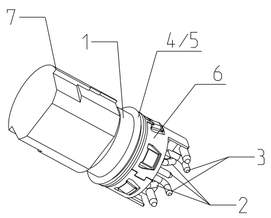

INDICATED PART-NO. XXXXXX-E

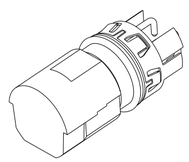

SCALE 2:1

THIS DRAWING IS A CONTROLLED DOCUMENT.

DIMENSIONS: mm

TOLERANCES UNLESS OTHERWISE SPECIFIED: ISO 8015 ISO 2768-mK
0 PLC ±
1 PLC ±
2 PLC ±
3 PLC ±
4 PLC ±
ANGLES ±

MATERIAL -
-

FINISH -

DWN N K NIKHIL 28APR2023
CHK M SZELAG 29APR2023
APVD J DE BRUIJN 29APR2023
PRODUCT SPEC 108-94897
APPLICATION SPEC 114-94782
WEIGHT -

TE Connectivity

NAME M12 MALE, UNI CODE,RA, 5P THR REAR MOUNT
-

SIZE	CAGE CODE	DRAWING NO	RESTRICTED TO
A2	00779	C-225266-E	-

CUSTOMER DRAWING | SCALE 5:1 | SHEET 1 OF 1 | REV A3

1471-9 (3/13)