© 2023 TE Connectivity. All Rights Reserved.

REVISIONS					
P	LTR	DESCRIPTION	DATE	DWN	APVD
	A1	NEW DRAWING	27NOV2023	NK	JDB
	A2	DRAWING RE-CREATED IN CREO	28DEC2023	NK	JDB

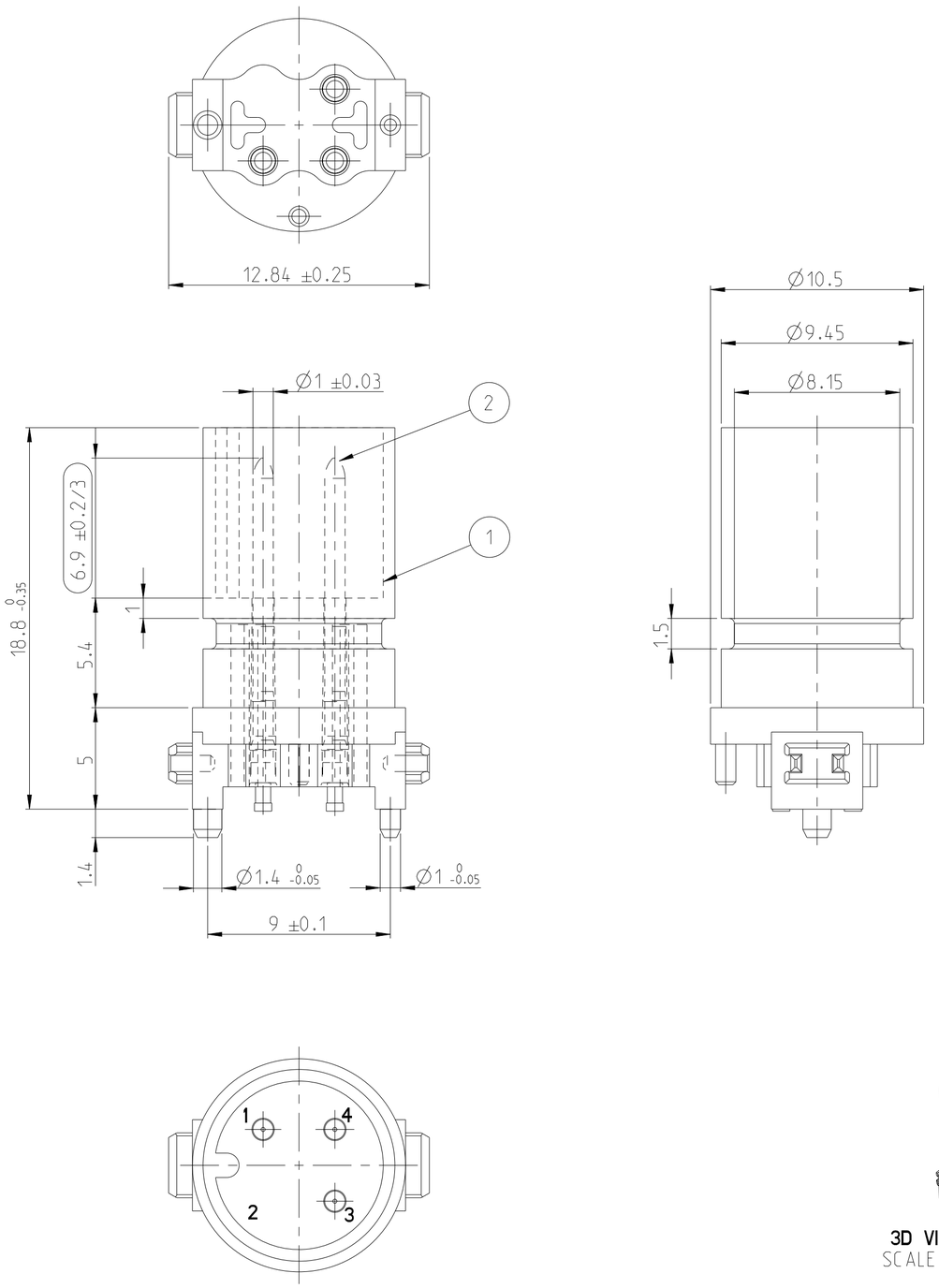

INSPECTION LEVEL 1: CONTROL CHART REQUIRED
/1 PROOF OF PROCESS CAPABILITY OR 100% TEST IF PROCESS CAPABILITY IS NOT ACHIEVED

INSPECTION LEVEL 2 AND 3: CONTROL CHART REQUIRED
/2 PROOF OF MEAN VALUE, STANDARD DEVIATION AND MACHINE CAPABILITY

/3 PROOF OF VALUES OR PROOF OF ATTRIBUTIVE TEST

INFORMATION ON THE SCOPE OF TESTING AND DETECTION BY ERNI VA 7.3.2.3

1. DRAWING SPECIFICATION ACCORDING TO DOCUMENT 5_3_16-DOC-1806-00915
2. HOLDING FORCE CONTACT > 20N
3. PART; 100 PCS. IN BUBBLE BAGS/BULK
4. PCB -LOYOUT PROPOSAL NOT DEFINED, BECAUSE CUSTOMER SOLDERS ON CIRCUIT BOARD EDGE.

QTY	REV OF EACH ASSY NO. (WHEN BLANK, USE DWG. REV)			
454066-E	REV	PART NO.	DESCRIPTION	ITEM NO.
3	-	515894-E	PINS	2
1	-	454064-E	HOUSING	1

PARTS LIST

THIS DRAWING IS A CONTROLLED DOCUMENT.

DIMENSIONS: mm

TOLERANCES UNLESS OTHERWISE SPECIFIED: ISO 2768-mK ISO 8015
0 PLC ±
1 PLC ±
2 PLC ±
3 PLC ±
4 PLC ±
ANGLES ±

MATERIAL -
-

FINISH -

DWN B S ADRUSH 16AUG2023
CHK M SZELAG 18AUG2023
APVD J DE BRUIJN 18AUG2023
PRODUCT SPEC 108-94887
APPLICATION SPEC 114-94781
WEIGHT -

TE Connectivity

NAME M12 MALE, A CODE, 3P, 10.5MM SMT
-

SIZE	CAGE CODE	DRAWING NO	RESTRICTED TO
A2	00779	C-454066-E	-

CUSTOMER DRAWING | SCALE 5:1 | SHEET 1 OF 1 | REV A2