© 2023 TE Connectivity. All Rights Reserved.

REVISIONS					
P	LTR	DESCRIPTION	DATE	DWN	APVD
	A1	NEW DRAWING	25AUG2023	NK	JDB
	E1	DRAWING RE-CREATED IN CREO	27DEC2023	NK	JDB

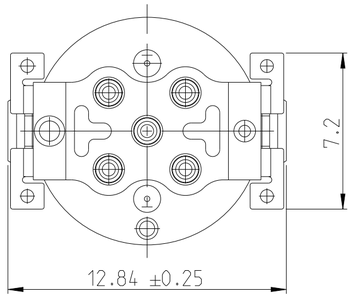

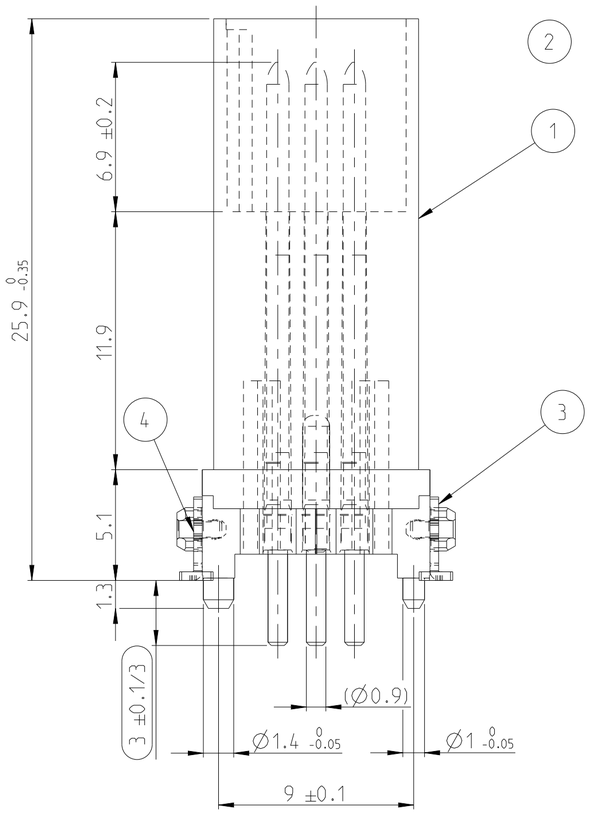

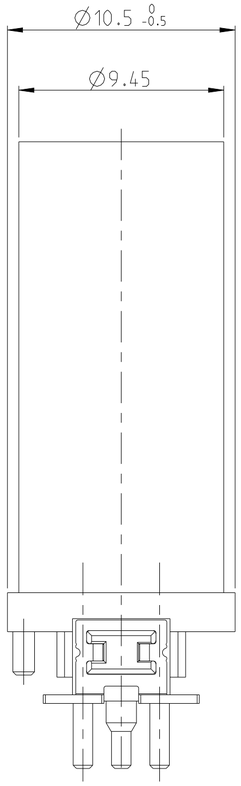

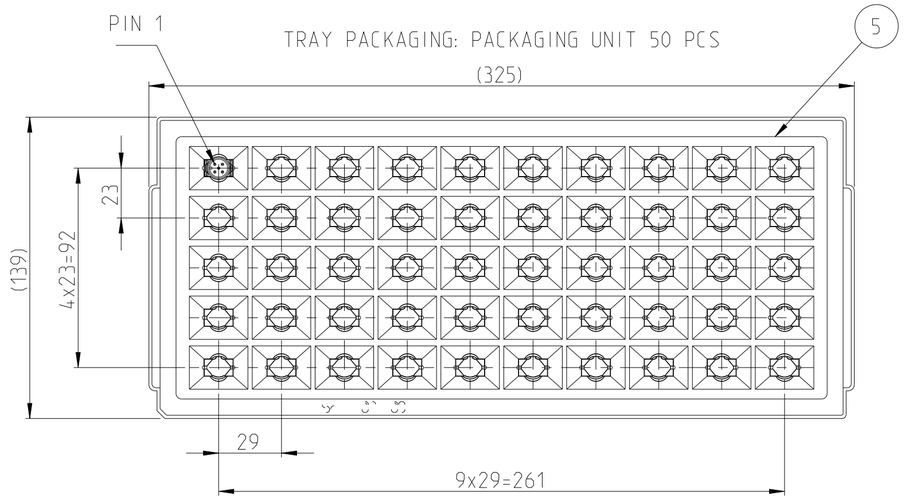

INSPECTION LEVEL 1: CONTROL CHART REQUIRED
/1 PROOF OF PROCESS CAPABILITY OR 100% TEST IF PROCESS CAPABILITY IS NOT ACHIEVED

INSPECTION LEVEL 2 AND 3: CONTROL CHART REQUIRED
/2 PROOF OF MEAN VALUE, STANDARD DEVIATION AND MACHINE CAPABILITY

/3 PROOF OF VALUES OR PROOF OF ATTRIBUTIVE TEST

INFORMATION ON THE SCOPE OF TESTING AND DETECTION BY ERNI VA 7.3.2.3

1. COPLANARITY OF ALL CLIPS <= 0.1MM

2 PART; 100 PCS. IN BUBBLE BAGS/BULK

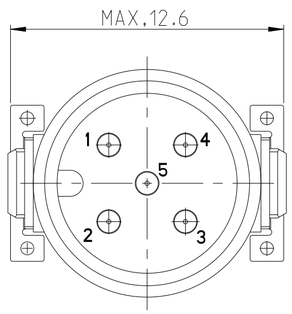

PCB-LAYOUT PROPOSAL

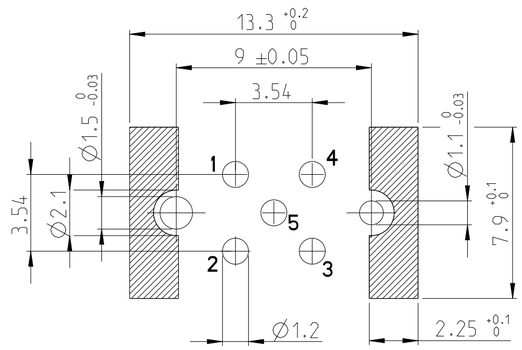

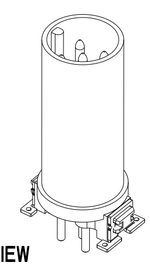

3D VIEW
SCALE 2:1

484118-E	374352-E	REV	DESCRIPTION	ITEM NO.
1	-	-	TOP COVER	6
1	-	-	TRAY PACKAGING	5
1	1	-	SOLDER CLIP LEFT	4
1	1	-	SOLDER CLIP RIGHT	3
5	5	-	PINS	2
1	1	-	HOUSING	1
-	-	REV OF EACH ASSY NO. (WHEN BLANK, USE DWG. REV)		
QTY		PARTS LIST		

THIS DRAWING IS A CONTROLLED DOCUMENT.

DIMENSIONS: mm

TOLERANCES UNLESS OTHERWISE SPECIFIED: ISO 2768-mK ISO 8015
0 PLC ±
1 PLC ±
2 PLC ±
3 PLC ±
4 PLC ±
ANGLES ±

MATERIAL -
-

FINISH -

DWN	N K NIKHIL	10AUG2023
CHK	M SZELAG	13AUG2023
APVD	J DE BRUIJN	13AUG2023
PRODUCT SPEC	108-94887	
APPLICATION SPEC	114-94781	
WEIGHT	-	

TE Connectivity

NAME M12 MALE, A CODE, 5P, 17MM THR
-

SIZE	CAGE CODE	DRAWING NO	RESTRICTED TO
A2	00779	C-374352-E	-

CUSTOMER DRAWING | SCALE 5:1 | SHEET 1 OF 1 | REV E1