THIS DRAWING IS UNPUBLISHED. RELEASED FOR PUBLICATION 20
© COPYRIGHT 20 BY - ALL RIGHTS RESERVED.

REVISIONS

P	LTR	DESCRIPTION	DATE	DWN	APVD
	A	INITIAL RELEASE	14MAR2018	DW	CW

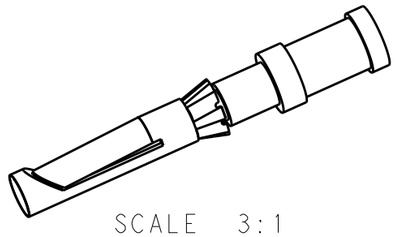

SCALE 3:1

1) Ød1=0.90, 1.10, 1.30, 1.45, 1.75

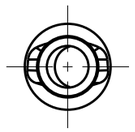

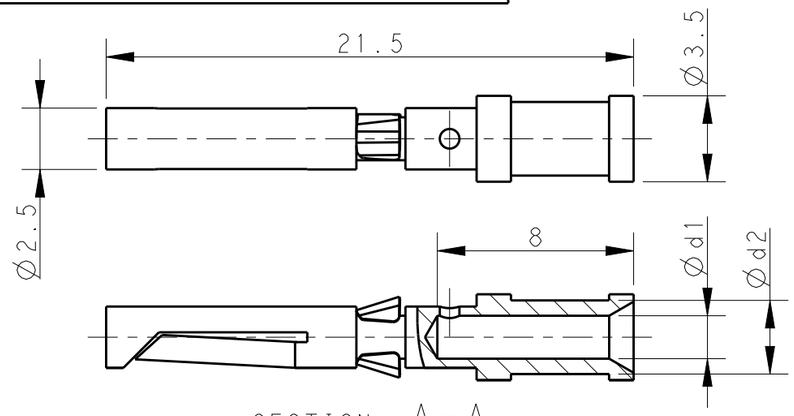

SECTION A-A

2) Ød1=2.25

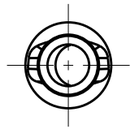

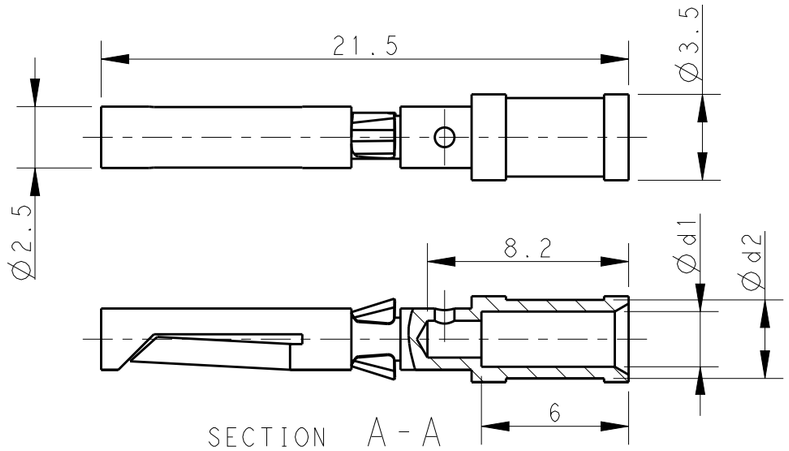

SECTION A-A

NOTES:
1. TECHNICAL CHARACTERISTICS:
   SOCKET CONTACT MATERIAL: BRASS
   SURFACE PLATING:
      SILVER PLATING: >= 2μm
      GOLD PLATING: >= 0.75μm
   CONTACT RESISTANCE: <=5 mΩ
   WIRE RANGE: 0.14-2.5 mm² (26-14 AWG)
   OPERATION TEMPERATURE: -40-+125°C
2. PACKAGING: 1000 PCS/BOX, 8000 PCS/CARTON

注释:
1. 技术参数:
   母针材料: 黄铜
   表面电镀:
      镀银: >= 2μm
      镀金: >= 0.75μm
   接触电阻: <=5 mΩ
   接线范围: 0.14-2.5 mm² (26-14 AWG)
   工作温度: -40-+125°C
2. 包装: 1000 PCS/盒, 8000 PCS/箱

SILVER PLATING 镀银			GOLD PLATING 镀金			Ød1	Ød2	WIRE GAUGE 线规		STRIPPING LENGTH 剥线长度(mm)
PART NUMBER 料号	PART DESCRIPTION 描述		PART NUMBER 料号	PART DESCRIPTION 描述				MM²	AWG	
T2020002002-002	CDF-0.3	CDF-0.3,SILVER PLATING DD母针 0.14-0.37mm2,镀银	T2020012002-002	DDF-0.3	DDF-0.3,GOLD PLATING DD母针 0.14-0.37mm2,镀金	0.90	2.55	0.14-0.37	26-22	8
T2020002005-002	CDF-0.5	CDF-0.5,SILVER PLATING DD母针 0.5mm2,镀银	T2020012005-002	DDF-0.5	DDF-0.5,GOLD PLATING DD母针 0.5mm2,镀金	1.10	2.60	0.5	20	
T2020002008-002	CDF-0.75	CDF-0.75,SILVER PLATING DD母针 0.75mm2,镀银	T2020012008-002	DDF-0.75	DDF-0.75,GOLD PLATING DD母针 0.75mm2,镀金	1.30	2.60	0.75	18	
T2020002010-002	CDF-1.0	CDF-1.0,SILVER PLATING DD母针 1.0mm2,镀银	T2020012010-002	DDF-1.0	DDF-1.0,GOLD PLATING DD母针 1.0mm2,镀金	1.45	2.60	1.0	18	
T2020002015-002	CDF-1.5	CDF-1.5,SILVER PLATING DD母针 1.5mm2,镀银	T2020012015-002	DDF-1.5	DDF-1.5,GOLD PLATING DD母针 1.5mm2,镀金	1.75	3.00	1.5	16	
T2020002025-002	CDF-2.5	CDF-2.5,SILVER PLATING DD母针 2.5mm2,镀银	T2020012025-002	DDF-2.5	DDF-2.5,GOLD PLATING DD母针 2.5mm2,镀金	2.25	3.20	2.5	14	6.2

THIS DRAWING IS A CONTROLLED DOCUMENT.

DIMENSIONS: mm

TOLERANCES UNLESS OTHERWISE SPECIFIED:
0 PLC ±-
1 PLC ±-
2 PLC ±-
3 PLC ±-
4 PLC ±-
ANGLES ±-

MATERIAL - -
FINISH - -

DWN DAVID WANG 05MAR2018
CHK GINO YAO 05MAR2018
APVD CHRIS WANG 05MAR2018
PRODUCT SPEC 108-137042
APPLICATION SPEC 114-137042
WEIGHT -

TE Connectivity

NAME CDF/DDF HD/HDD SOCKET CONTACT

SIZE	CAGE CODE	DRAWING NO	RESTRICTED TO
A3	00779	C-T20200X20XX002	-

CUSTOMER DRAWING | SCALE 4:1 | SHEET 1 OF 1 | REV A

1470-19 (3/13)