© 2023TE Connectivity. All Rights Reserved.

REVISIONS

P	LTR	DESCRIPTION	DATE	DWN	APVD
	B	INITIAL RELEASE	16MAR2023	GY	CW
	C	ECR-25-238321	27MAR2025	HQ	RB

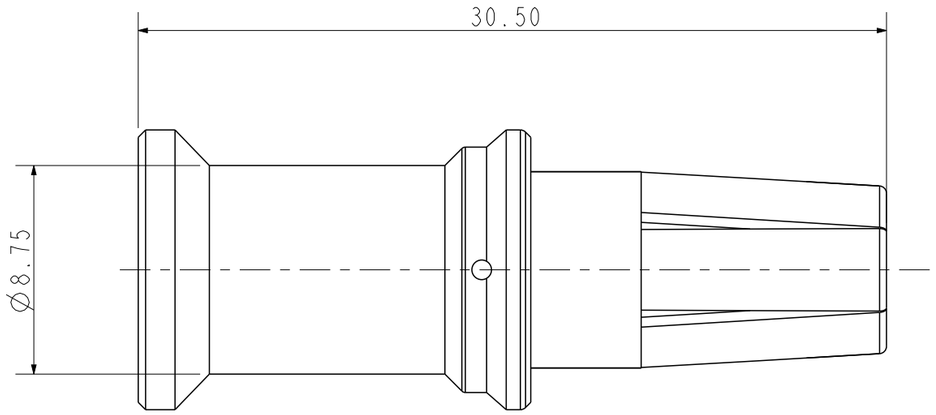

NOTES:
1. TECHNICAL CHARACTERISTICS:
   CONTACT MATERIAL: COPPER ALLOY
   SURFACE PLATING:
      SILVER PLATING: >=2μm
   CONTACT RESISTANCE: <=1.5mΩ
   WIRE RANGE: 16mm²

注释:
1. 技术参数:
   公针材料: 铜合金
   表面电镀:
      镀银: >=2μm
   接触电阻: <=1.5mΩ
   接线范围: 16mm²

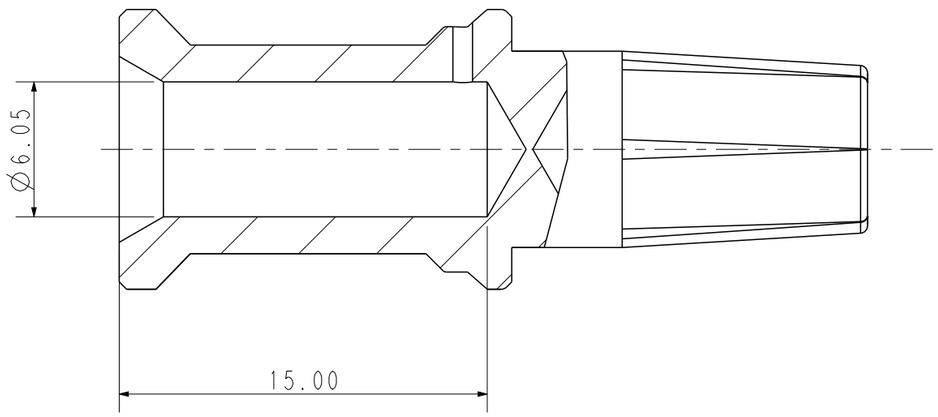

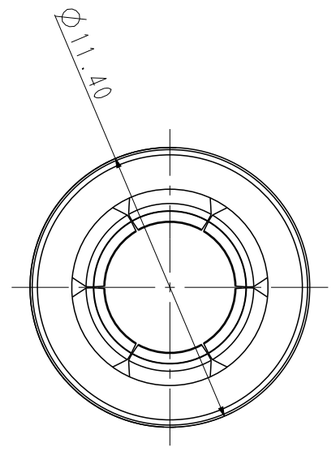

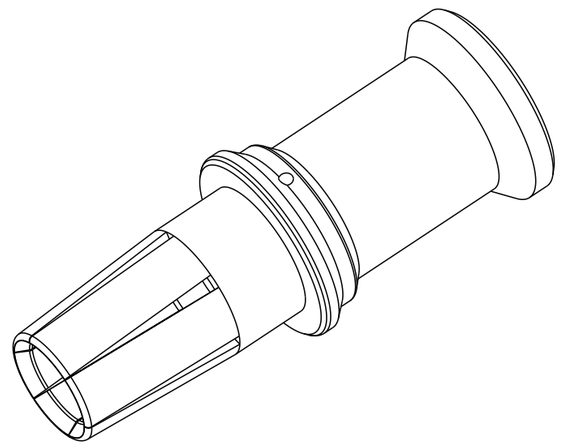

PART NUMBER 料 号	PART DESCRIPTION 描 述	WIRE GAUGE 线 规(mm²)	STRIPPING LENGTH(mm) 剥线长度
T2400002160-001	CSF-16-B　CSF-16-B,SILVER PLATING / SS导针 16mm2 内孔加大,镀银	16	15

THIS DRAWING IS A CONTROLLED DOCUMENT.

DIMENSIONS: mm

TOLERANCES UNLESS OTHERWISE SPECIFIED:
0 PLC ±-
1 PLC ±-
2 PLC ±-
3 PLC ±-
4 PLC ±-
ANGLES ±-

MATERIAL: -
FINISH: -

DWN GINO.YAO 16MAR2023
CHK CHRIS.WANG 16MAR2023
APVD CHRIS.WANG 16MAR2023
PRODUCT SPEC 108-137059
APPLICATION SPEC 114-137059
WEIGHT -

TE Connectivity

NAME: CSF-16-B

SIZE	CAGE CODE	DRAWING NO	RESTRICTED TO
A3	00779	C-T2400002160001	-

CUSTOMER DRAWING　SCALE 2:1　SHEET 1 OF 1　REV C

1470-19 (3/13)