THIS DRAWING IS UNPUBLISHED. RELEASED FOR PUBLICATION 20
© COPYRIGHT 20 BY - ALL RIGHTS RESERVED.

REVISIONS

P	LTR	DESCRIPTION	DATE	DWN	APVD
	A	INITIAL RELEASE	14APR2023	G.W	C.W

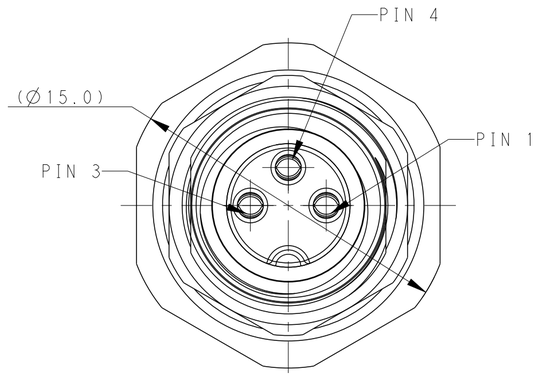

VIEW A
3POS.

VIEW A

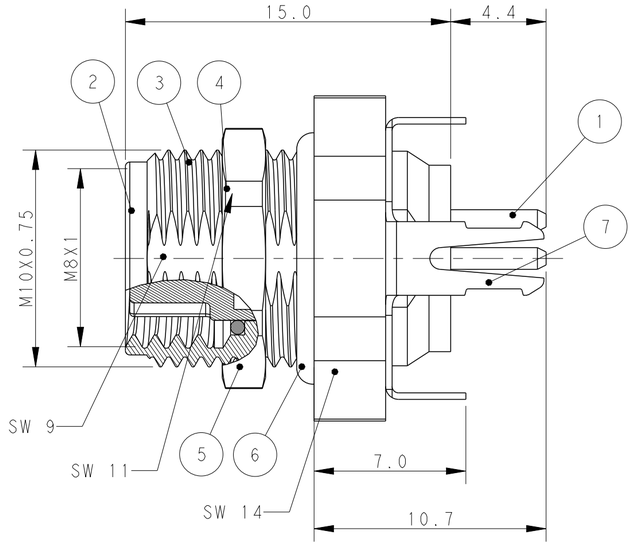

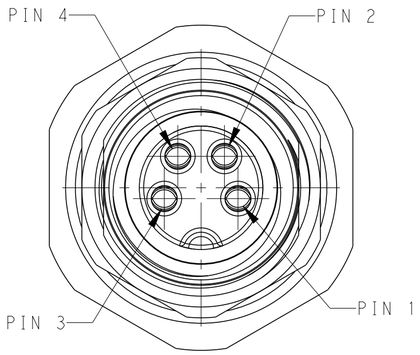

VIEW A
4POS.

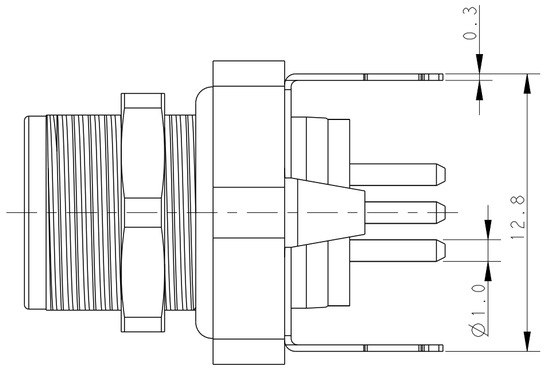

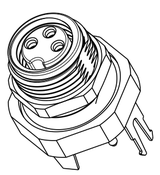

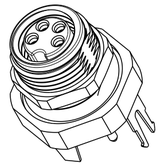

NOTES:

1. TECHNICAL DATA: SEE TABLE 1
2. PIN ASSIGNMENT SEE VIEW A
3. RECOMMENDED PANEL CUTOUT SEE DETAIL
4. ALL DIMENSIONS ARE FOR NOMINAL REFERENCE ONLY UNLESS OTHERWISE STATED
5. THE PANEL NUT MUST BE FLAT AGAINST THE PANEL AND TIGHT TO THE TORQUE IS 1.0NM
6. THE RECOMMENDED TORQUE FOR MATING THE CONNECTOR IS 0.4Nm

注意事项

1. 技术参数：见表1
2. 端子分布见视图A
3. 推荐开孔尺寸详见如图所示
4. 所有尺寸仅供参考， 除非另有说明
5. 面板螺母需与面板贴平，推荐锁紧扭力1.0Nm
6. 推荐连接器对配锁紧扭力：0.4Nm

TABLE 1

TECHNICAL DATA	T4041037031-001	T4041037041-001
RATED IMPULSE VOLTAGE	1500V	800V
RATED VOLTAGE	60V	30V
RATED CURRENT	3A	
OVERVOLTAGE CATEGORY	II	
MATERIAL GROUP	II	
DEGREE OF PROTECTION	IP67	
TEMPERATURE	-40°C~85°C	

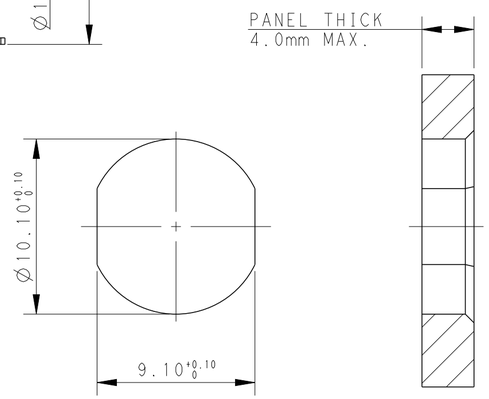

RECOMMENDED PANEL SIZE

MATERIAL	DESCRIPITON	ITEM
BRASS	SHIELDING	7
RUBBER	O-RING	6
BRASS	NUT	5
RUBBER	O-RING	4
BRASS	BODY NUT	3
PA66	HOUSING	2
GOLD PLATED	CONTACT	1

TYPE	POS.	PART NUMBER
RPC-M8-FF-4CON-M10-LBUSH1	4	T4041037041-001
RPC-M8-FF-3CON-M10-LBUSH1	3	T4041037031-001

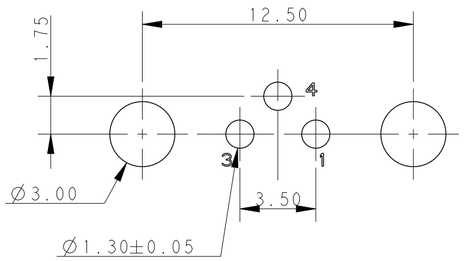

3POS.

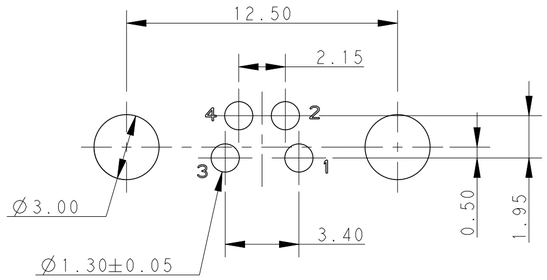

4POS.

RECOMMENDED PCB LAYOUT
PCB THICKNESS:2.4mm

THIS DRAWING IS A CONTROLLED DOCUMENT.

DIMENSIONS: mm

TOLERANCES UNLESS OTHERWISE SPECIFIED:
0 PLC ±-
1 PLC ±0.25
2 PLC ±0.15
3 PLC ±
4 PLC ±
ANGLES ±-

MATERIAL - -
FINISH - -

DWN 27JAN2022 GAVIN WANG
CHK 27JAN2022 KEVIN HUANG
APVD 27JAN2022 CHRIS WANG
PRODUCT SPEC -
APPLICATION SPEC -
WEIGHT -

TE Connectivity

NAME
M8 PANEL PCB CONNECTOR FEMALE SIDE REAR MOUNTING SHIELDED TYPE, 7MM
-

SIZE	CAGE CODE	DRAWING NO	RESTRICTED TO
A2	-	C-T40410370X1001	-

CUSTOMER DRAWING | SCALE 4:1 | SHEET 1 OF 1 | REV A