THIS DRAWING IS UNPUBLISHED. RELEASED FOR PUBLICATION 20
© COPYRIGHT BY - ALL RIGHTS RESERVED.

REVISIONS

P	LTR	DESCRIPTION	DATE	DWN	APVD
	A	INITIAL	28JUN2017	QY	CW

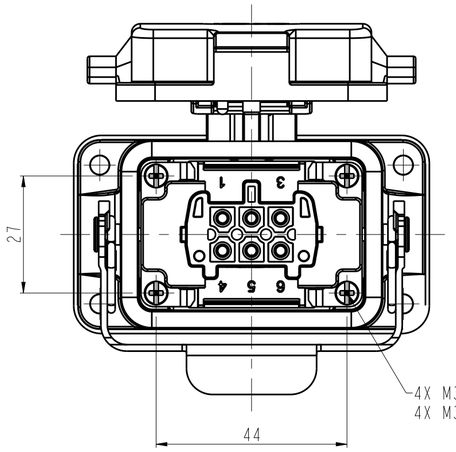

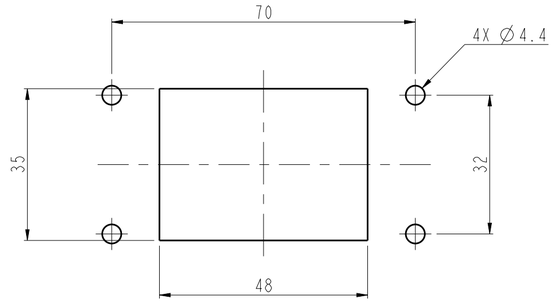

RECOMMENDED PANEL CUT OUT DIMENSION
推荐开孔安装尺寸

NOTES:
1. TECHNICAL CHARACTERISTICS:
HOUSING MATERIAL: DIE CAST ALUMINIUM ALLOY
RATED VOLTAGE: 500 V
RATED CURRENT: 16 A
RATED IMPULSE VOLTAGE: 6 KV
POLLUTION DEGREE: 3
FLAMMABILITY: UL94V-0
MATING CYCLES: 100 CYCLES
WIRE RANGE: 0.5-2.5 mm2 (20-14 AWG)
CONTACT TYPE: SPRING CRIMP CONTACT

注释:
1. 技术参数:
壳体材料: 铝合金
额定电压: 500V
额定电流: 16A
额定脉冲电压: 6 KV
污染等级: 3
阻燃等级: UL94V-0
插拔次数: 100次
接线范围: 0.5-2.5 mm2 (20-14 AWG)
接线类型: 弹片型

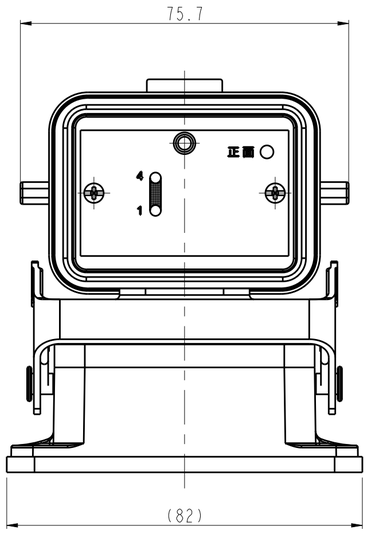

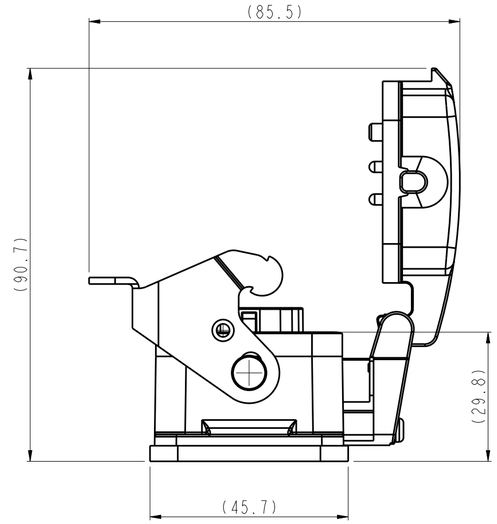

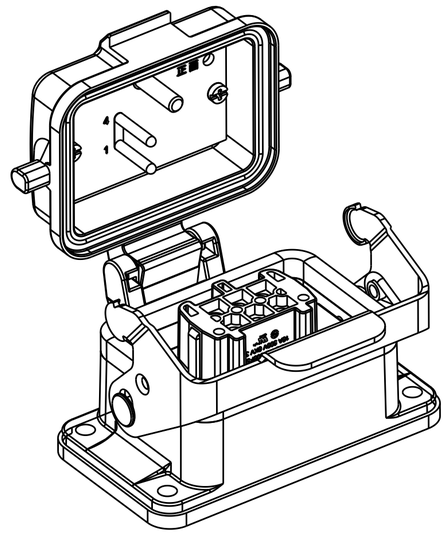

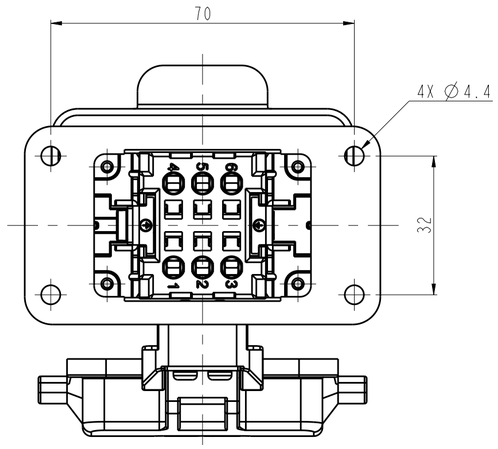

PART NUMBER 料号	PART DESCRIPTION 描述	
T2120060205-000	ZGG-6DT(1-4)	H6B ELEVATOR MAINTENANCE BOX INCLUDING INSERT (1-4) H6B 电梯检修盒含芯件(1-4)

THIS DRAWING IS A CONTROLLED DOCUMENT.

DIMENSIONS: mm

TOLERANCES UNLESS OTHERWISE SPECIFIED:
0 PLC ±-
1 PLC ±-
2 PLC ±-
3 PLC ±-
4 PLC ±-
ANGLES ±-

MATERIAL - -
FINISH - -

DWN QIANG YUAN 28JUN2017
CHK GINO YAO 28JUN2017
APVD CHRIS WANG 28JUN2017
PRODUCT SPEC -
APPLICATION SPEC -
WEIGHT -

TE Connectivity

NAME ZGG-6DT(1-4)

SIZE	CAGE CODE	DRAWING NO	RESTRICTED TO
A2	00779	C⇒T2120060205000	-

CUSTOMER DRAWING | SCALE 1:1 | SHEET 1 OF 1 | REV A