# Floor standing enclosures
# 3R Combinable version

MOUNTING INSTRUCTIONS

nVent HOFFMAN

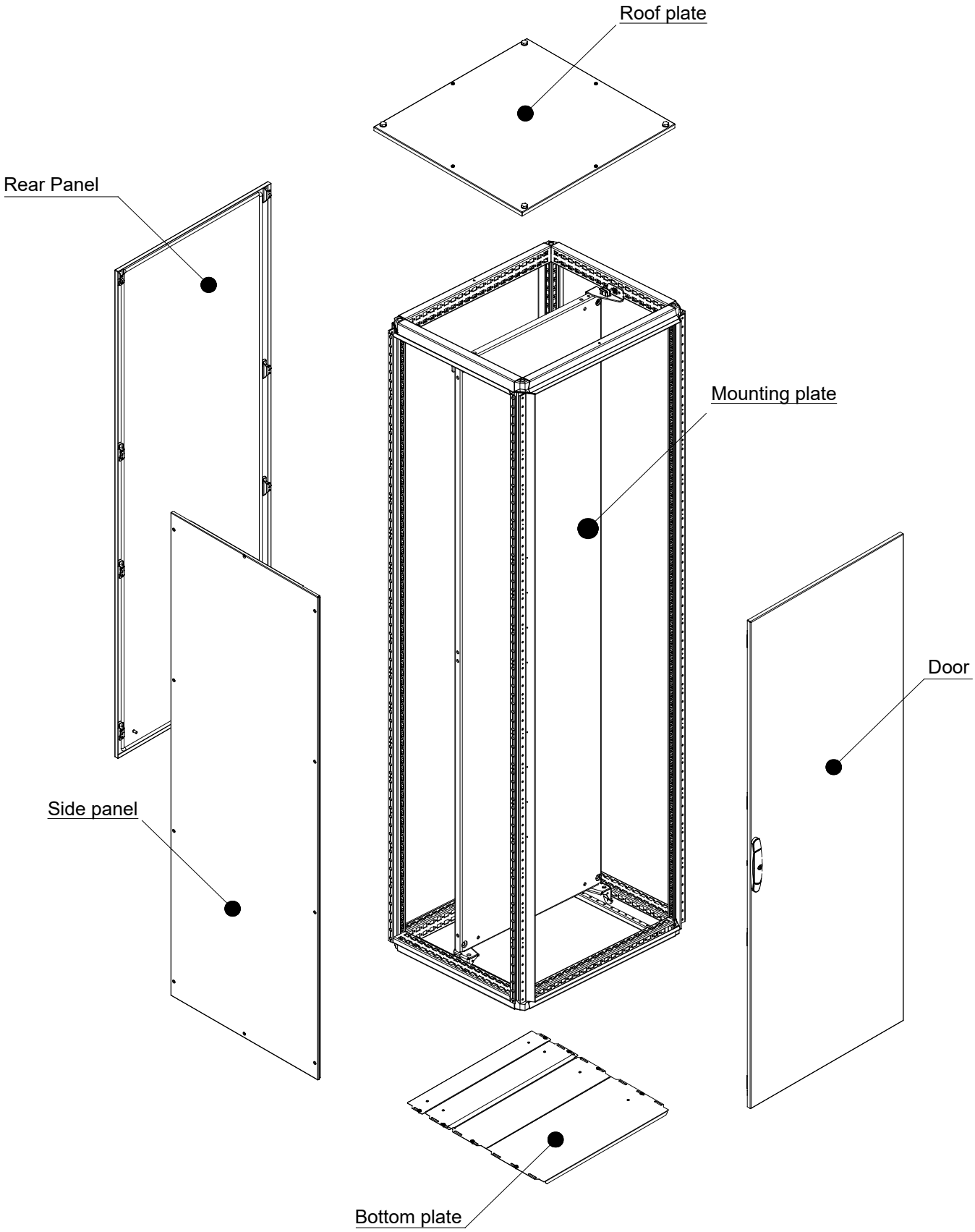
Roof plate
Rear Panel
Mounting plate
Door
Side panel
Bottom plate

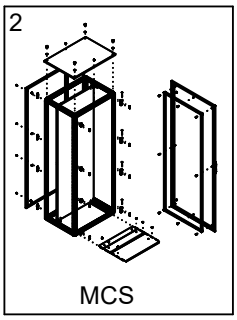


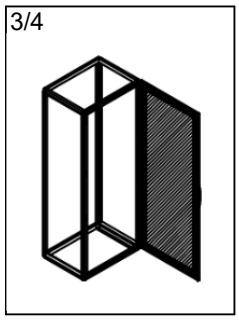


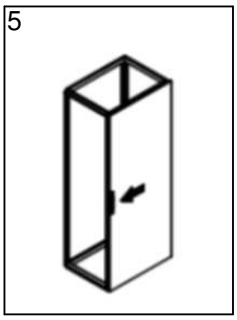


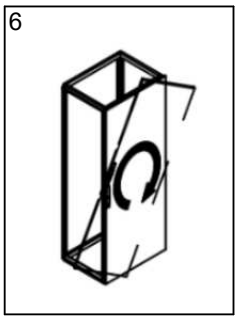


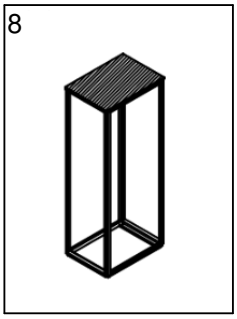


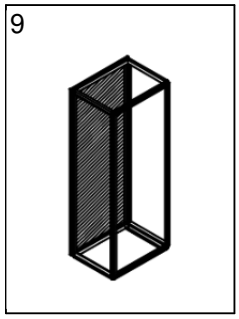


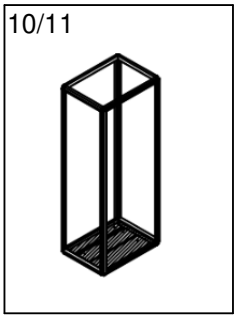


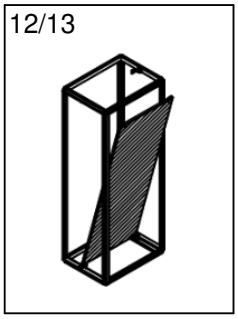


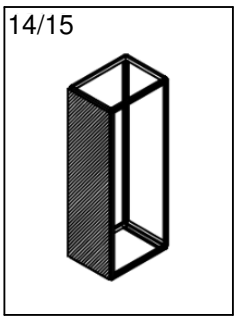


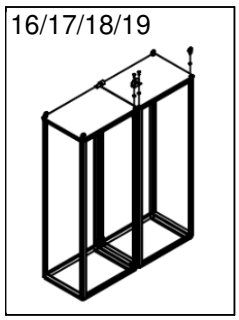


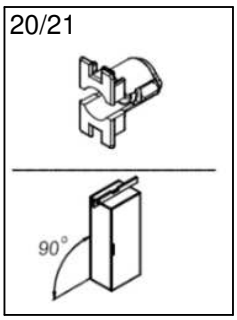


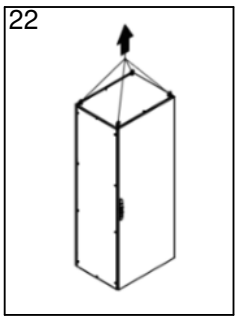


**WARNING:** When mounting on or over a combustible surface, a floor plate of at least 1.43 mm galvanized or 1.6 mm uncoated steel extended at least 150 mm beyond the equipment on all sides must be installed.

**WARNING:** In order to maintain the environmental integrity of the enclosure, devices with the same environmental ratings shall be used to close openings in customized enclosure.

# MCS-3R

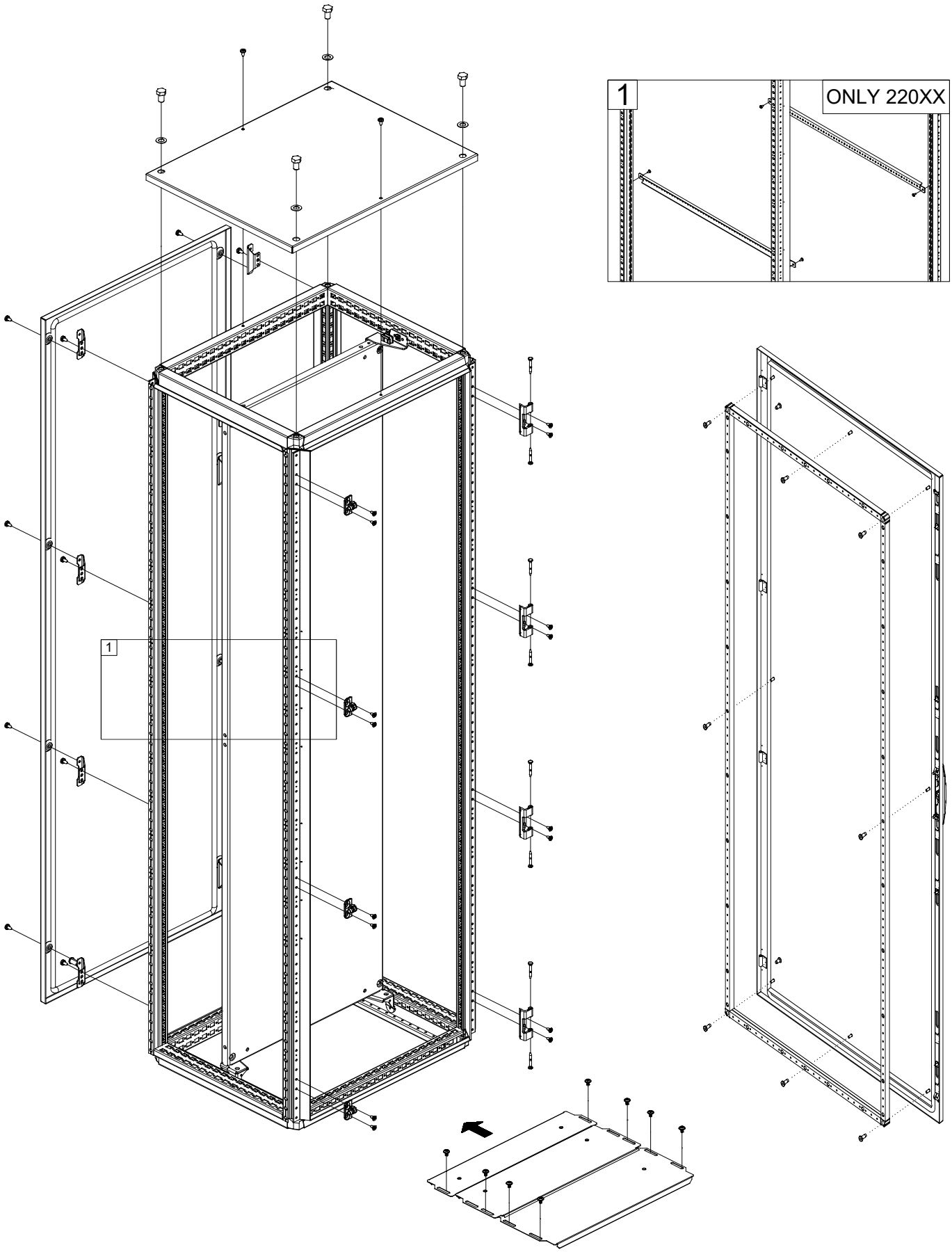

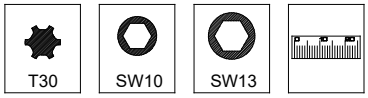


| H | A | B | C |
|---|---|---|---|
| 1100 | 175 | 275 | 425 |
| 1400 | 325 | 325 | 525 |
| 1600 | 425 | 425 | 525 |
| 1800 | 525 | 525 | 525 |
| 2000 | 625 | 625 | 525 |
| 2200 | 725 | 625 | 725 |

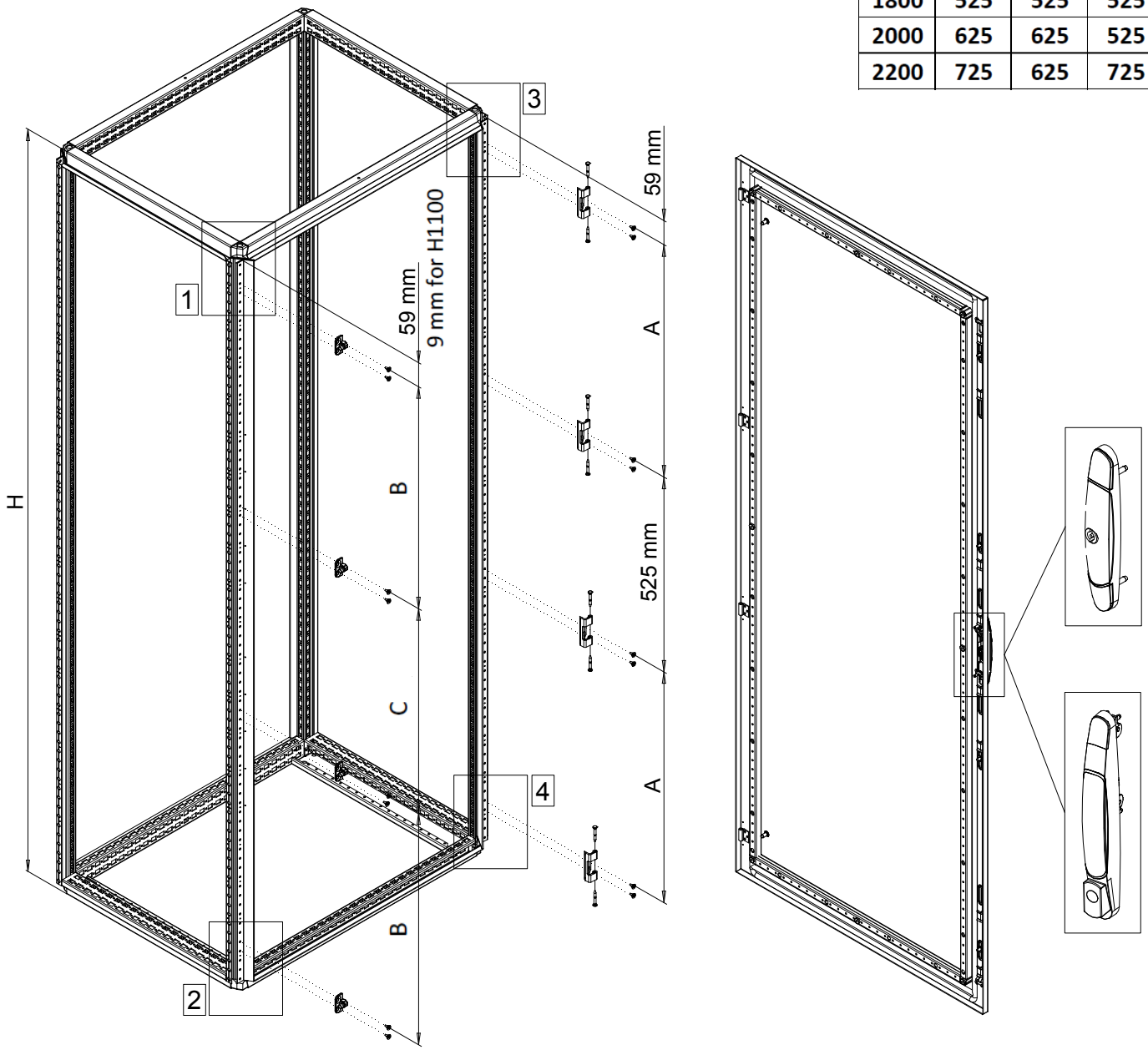


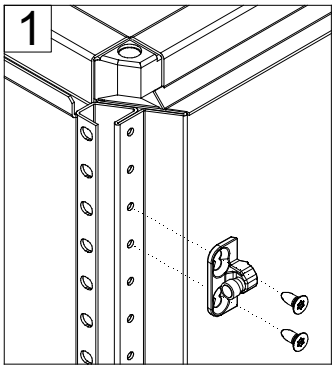


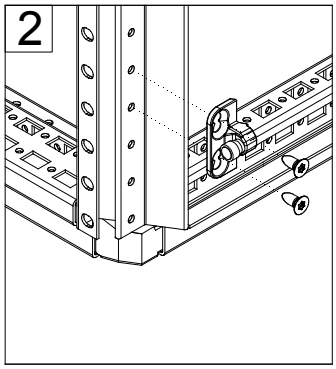


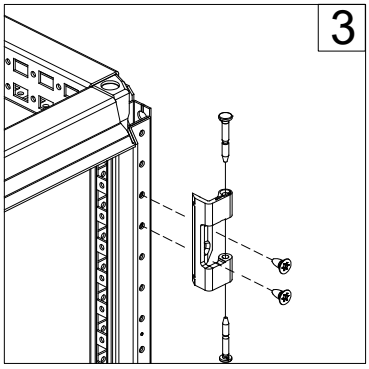


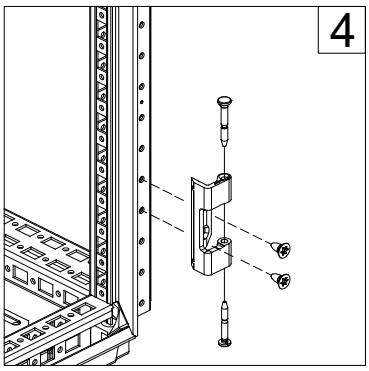

SW3

| Ref. | Pic. | Qty. |
|---|---|---|
| A | M5x10 | 2 |
| B | M5 | 4 |

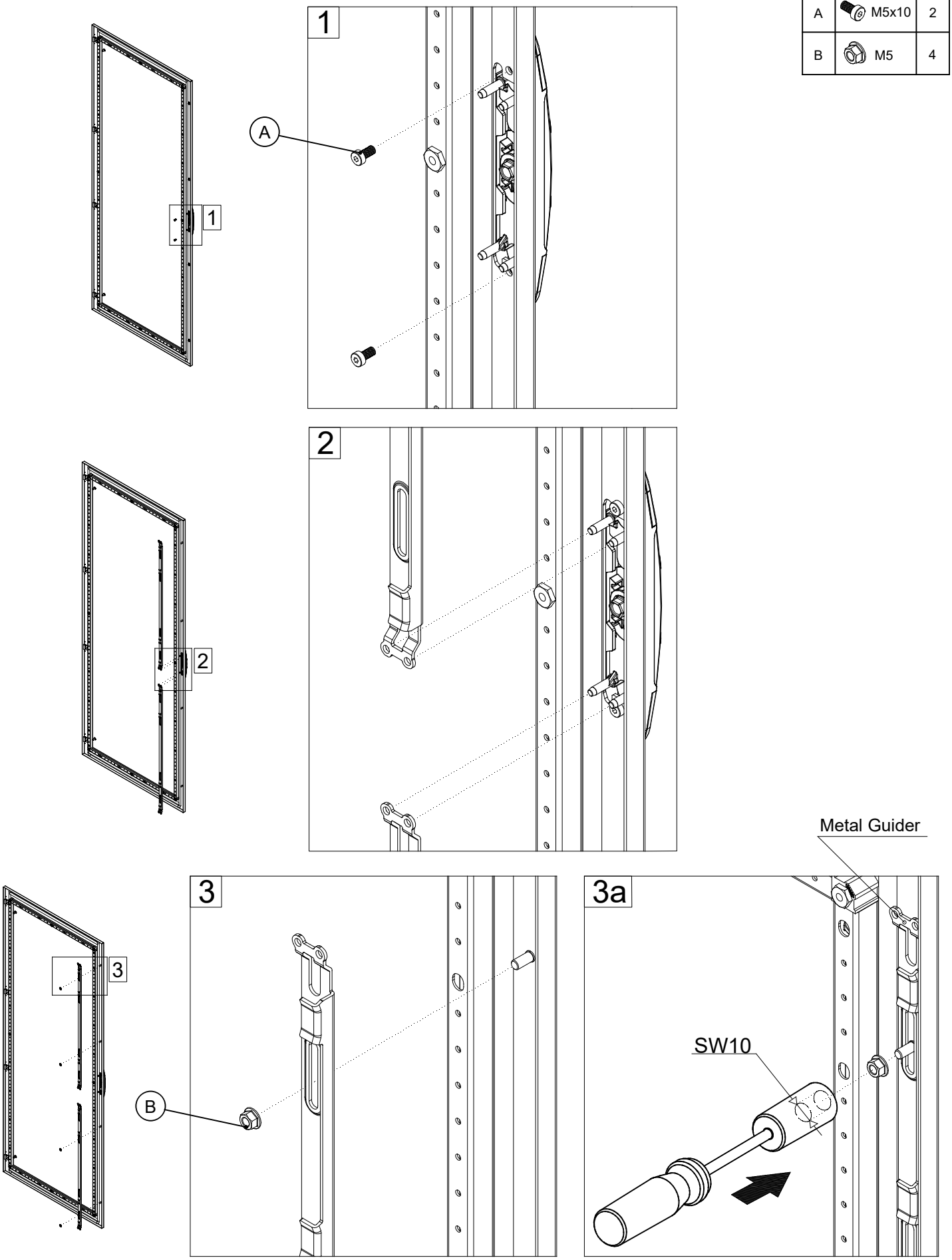

# MOUNTING THE LIFT HANDLE

SW3

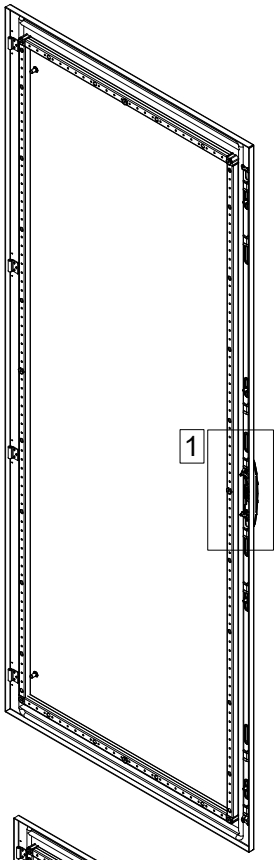


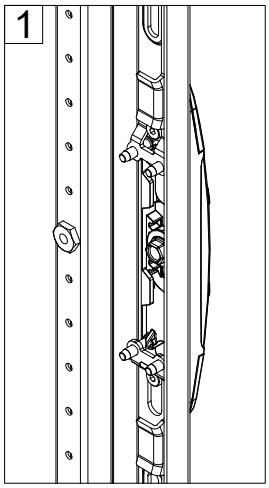


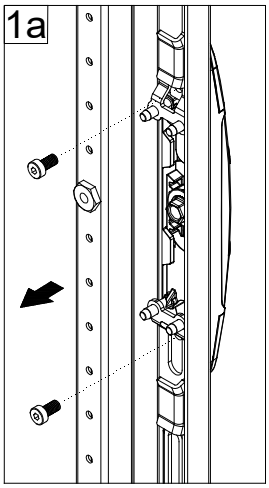


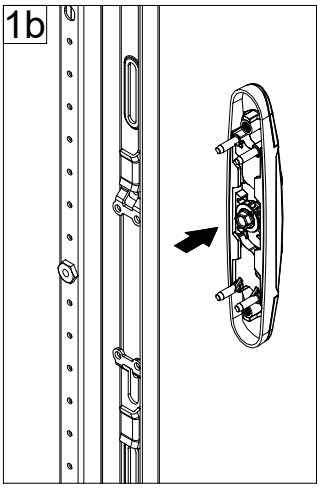


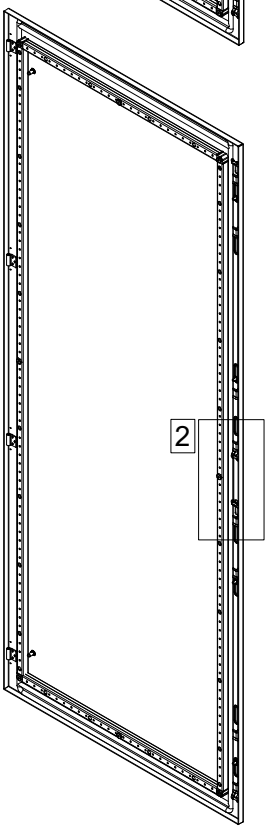


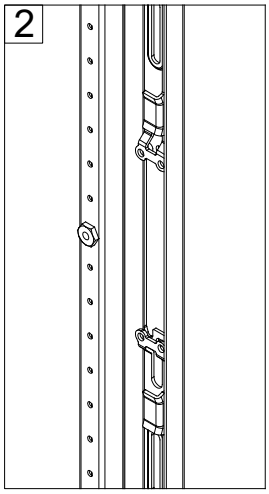


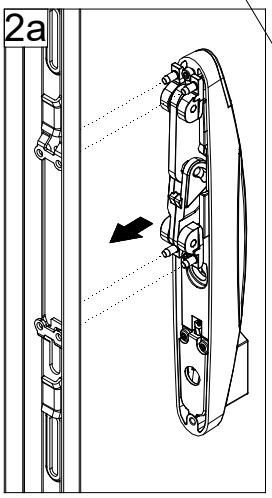


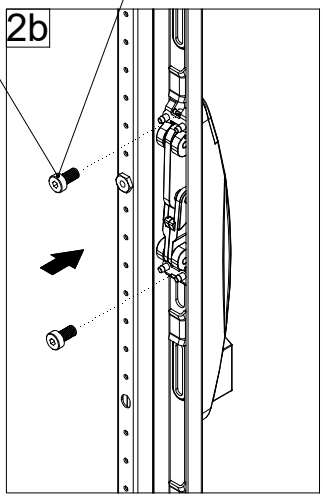


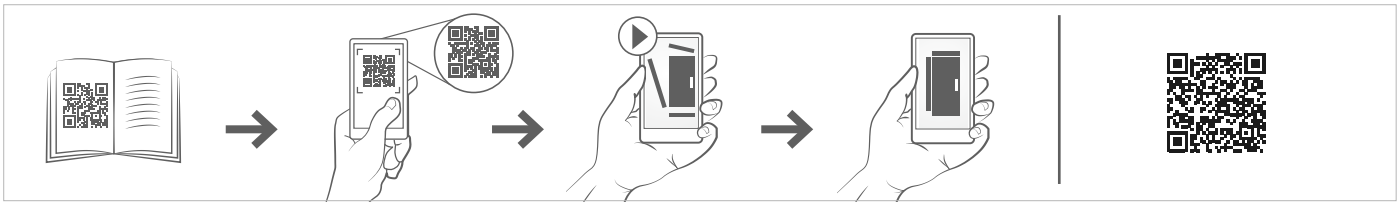

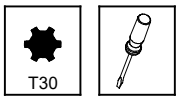


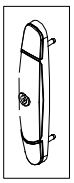

Standard Locking System

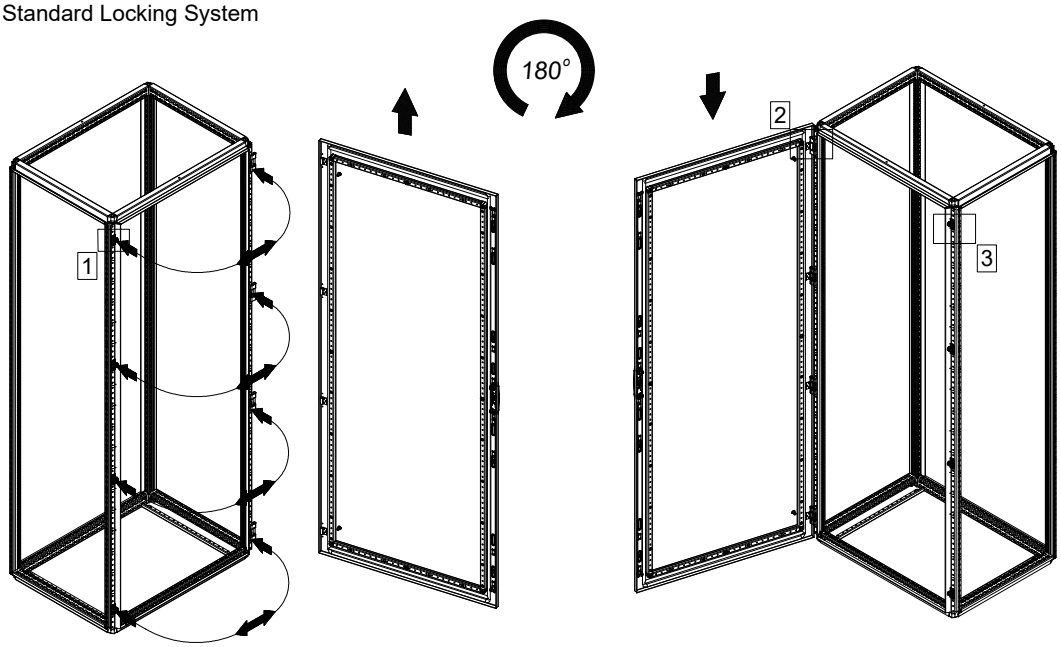


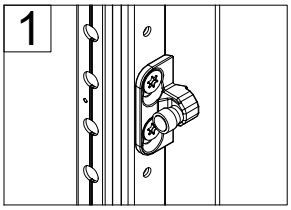


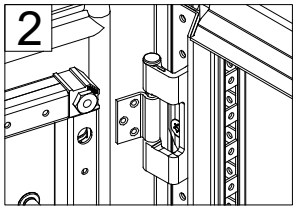


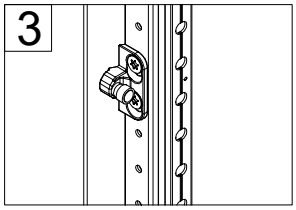


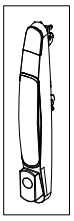

Lift Handle Locking System

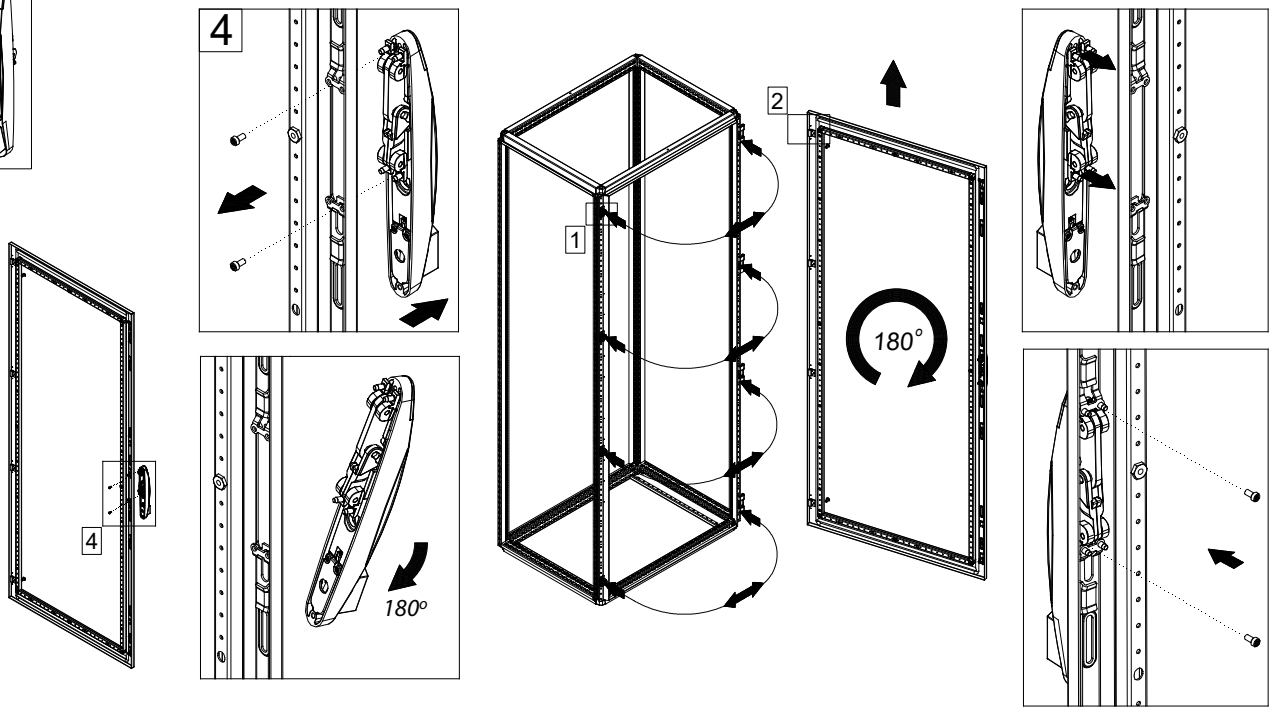


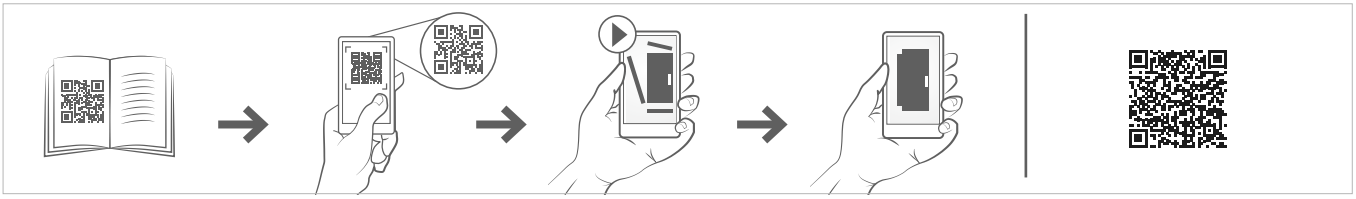

## Standard Locking System

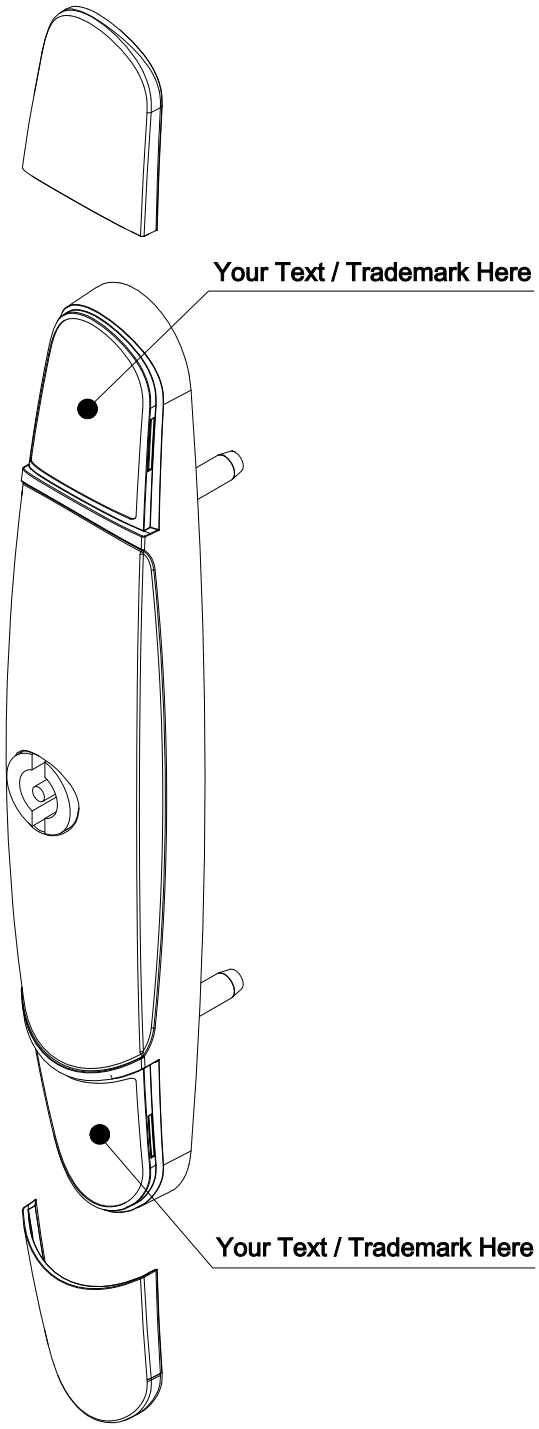


## Lift Handle Locking System

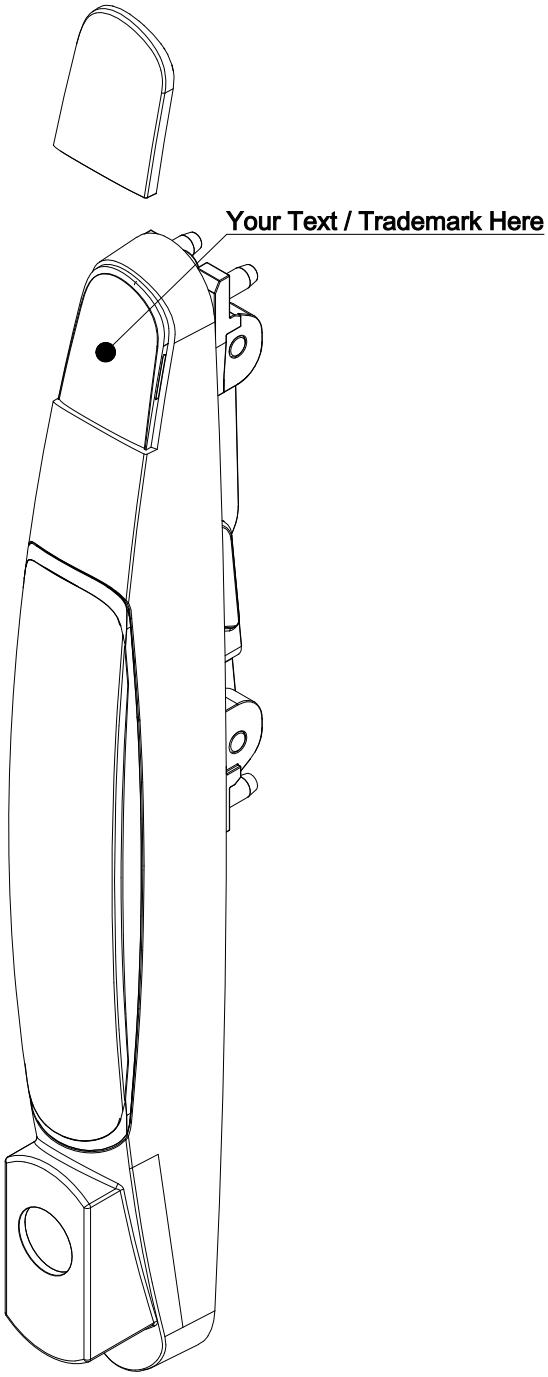


NOTE: transparent covers are ordered separately

# TOP PANEL

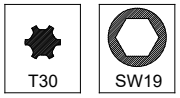


| Ref. | Pic. | D (mm) | <800 | ≥800 |
|---|---|---|---|---|
| A | M6x12 | | 2 | 4 |
| B | M12x20 | | 4 | 4 |
| C | M12 | | 4 | 4 |

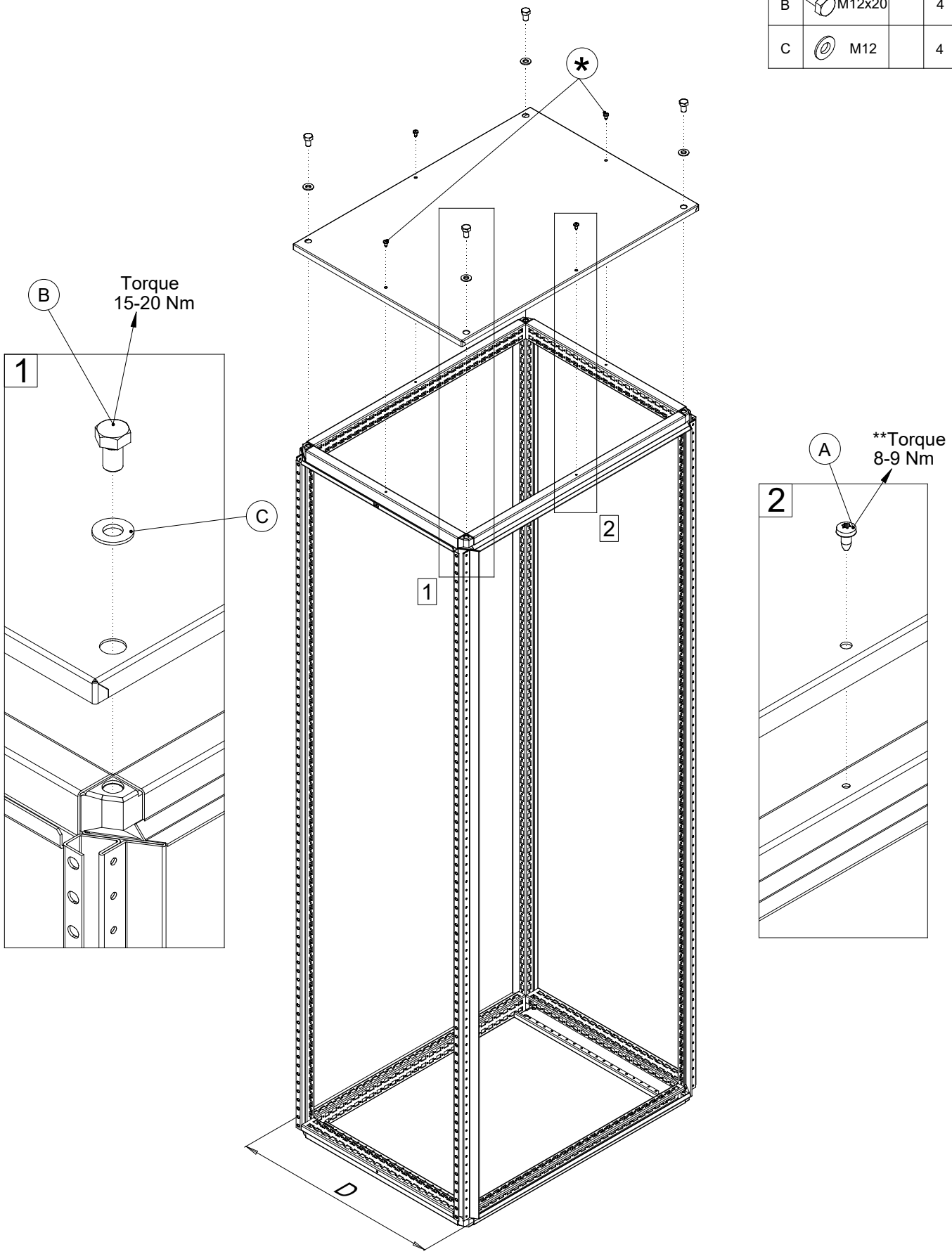


* - Used on enclosures 800mm deep and above.

** - Torque value for first tightening. For following tightening, torque value recommended is 4-5 Nm.

# BACK PANEL

T25 T30

| Ref. | Pic. | W (mm) | <1000 | ≥1000 |
|---|---|---|---|---|
| A | M5x10 | | - | 2 |
| B | M6x12 | | 16 | 18 |
| C | M6 | | - | 2 |

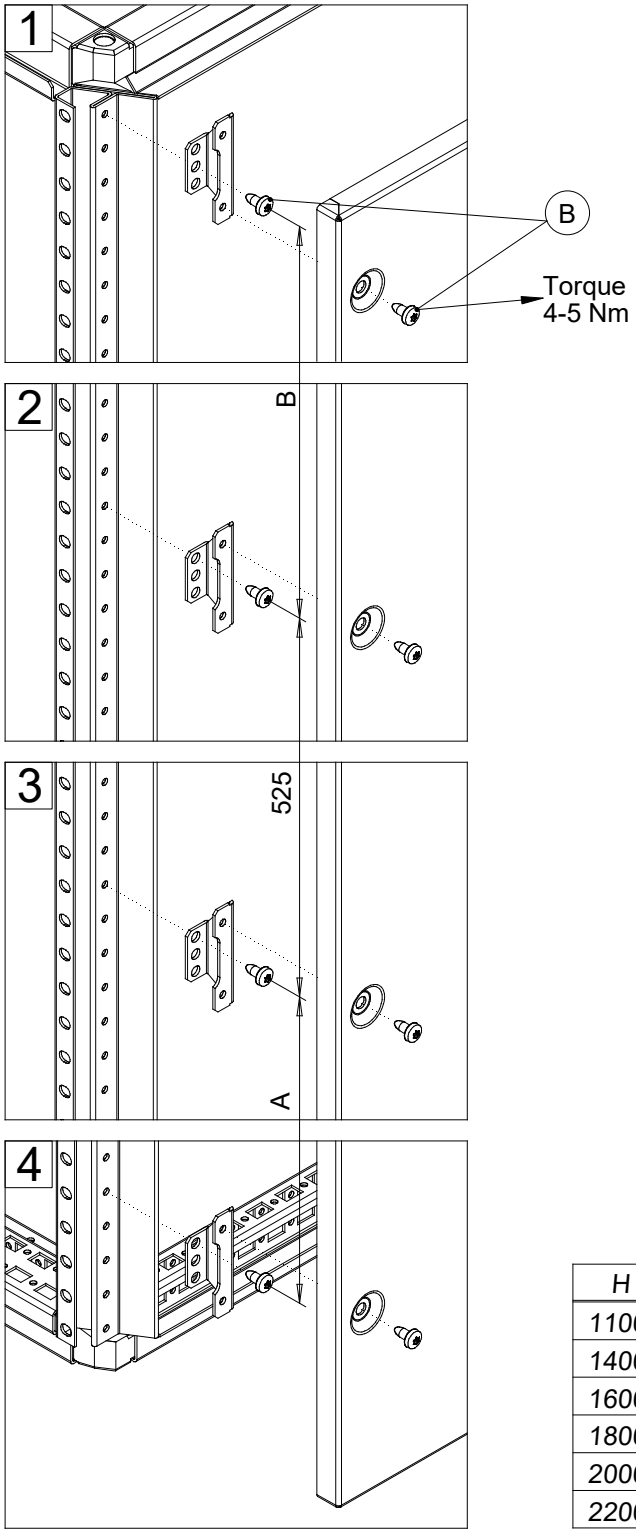


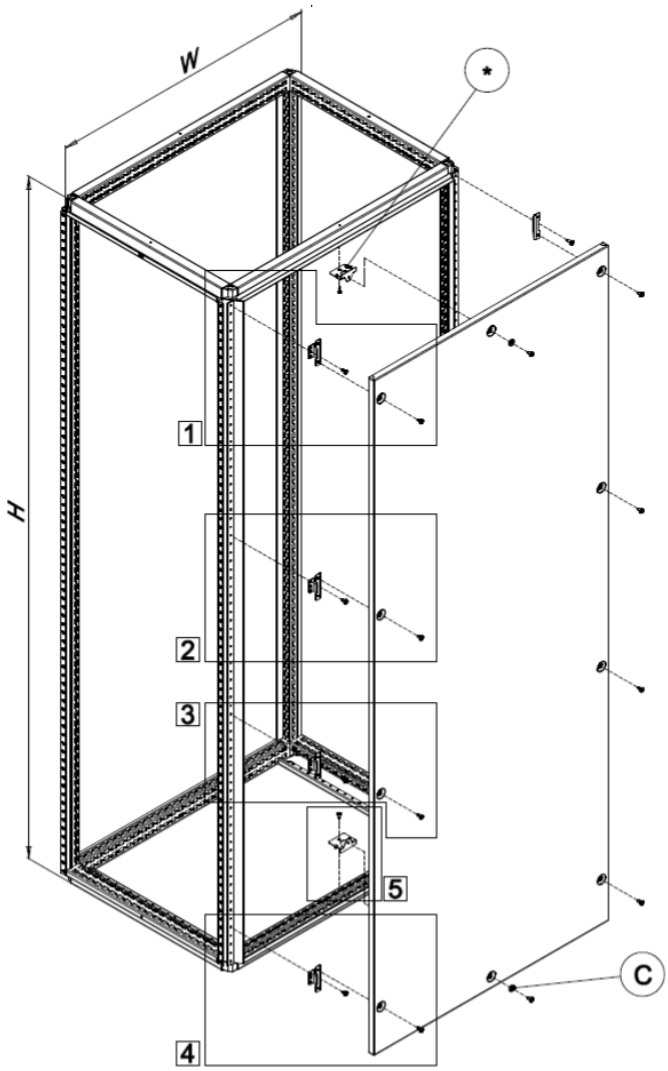


| H | A | B |
|---|---|---|
| 1100 | - | 350 |
| 1400 | 325 | 375 |
| 1600 | 425 | 475 |
| 1800 | 525 | 575 |
| 2000 | 625 | 675 |
| 2200 | 725 | 775 |

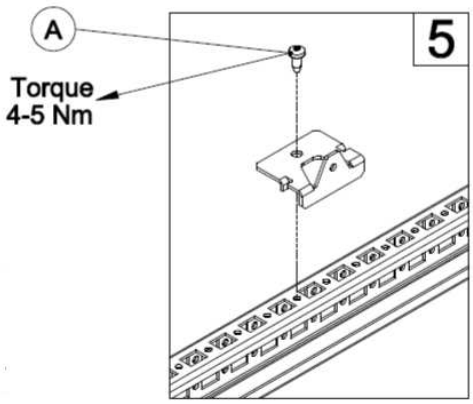


* - Used on enclosures 1000mm wide and above.

T25

# MOUNTING BOTTOM PLATES

| Ref. | Pic. | Qty. |
|---|---|---|
| A | St. 5.5x10 | 6/8 |
| B | | 5/7 |

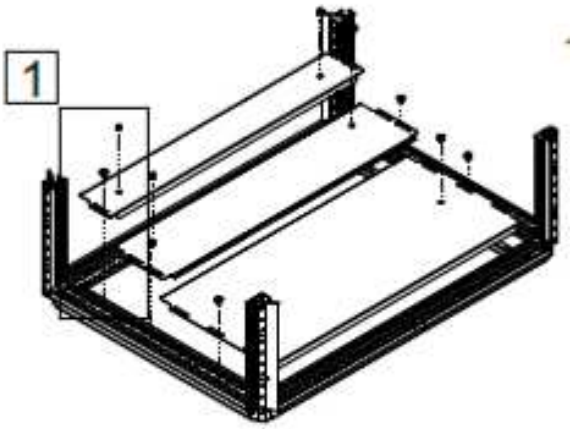


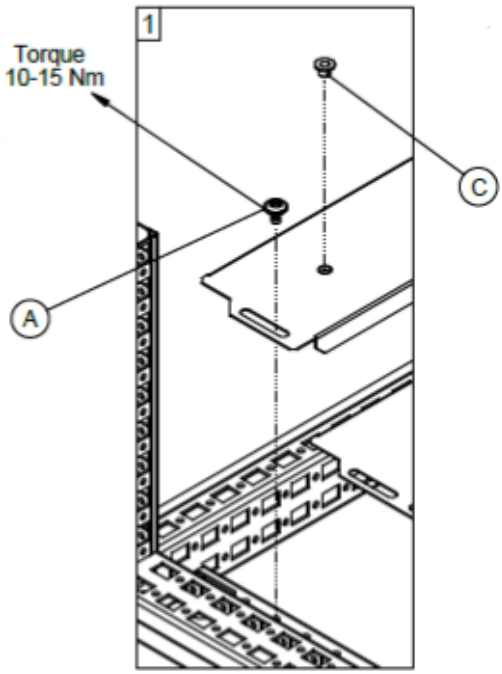


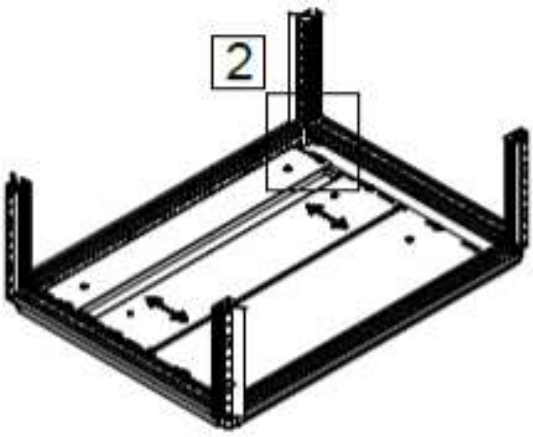


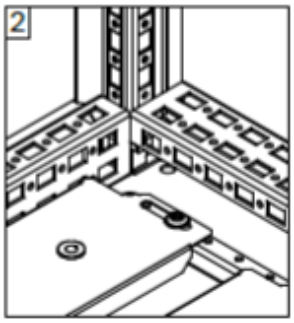

# SEALING BOTTOM PLATES

*Required for IP55*

| Ref. | Pic. | Qty. |
|---|---|---|
| A | 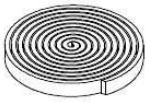 4,5x8 | 6m |
| B | 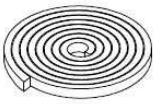 25x25 | 1,6m |
| C | | 4 |

BG01 ordered separately

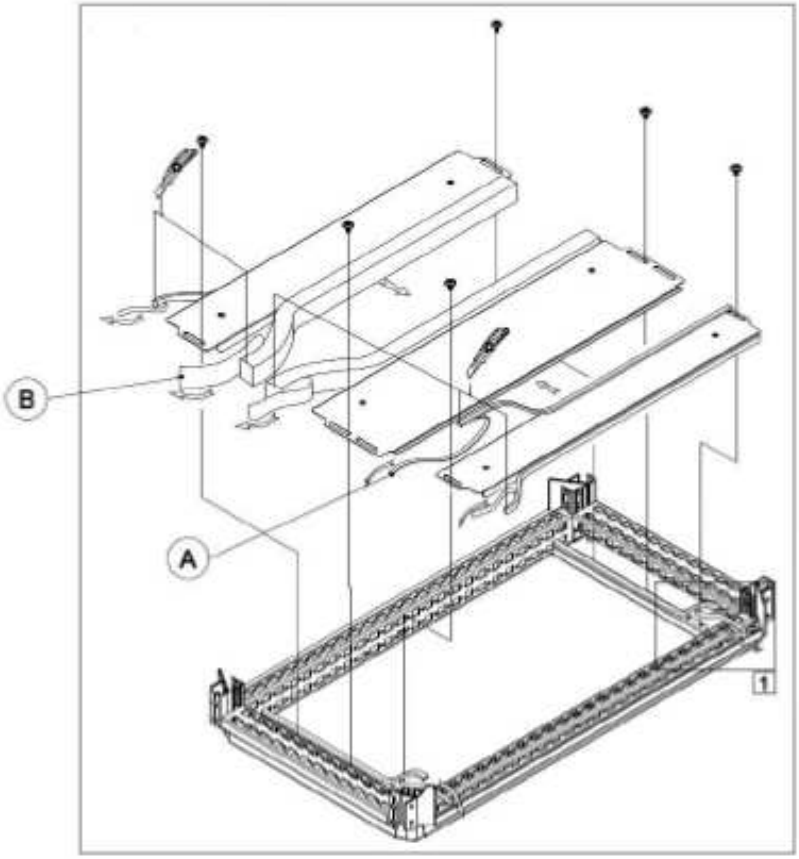


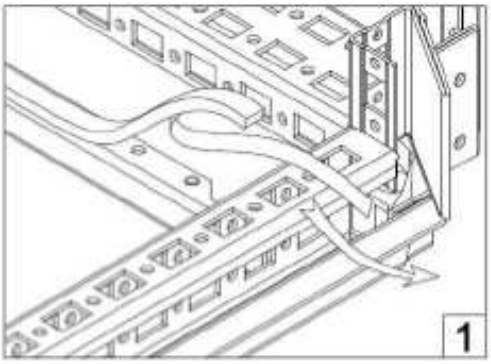

| Ref. | Pic. | |
|---|---|---|
| A | M8x16 | 2 |
| B | | |
| C | | 2 |
| D | Botto | 1 |
| E | | |
| F | | |
| G | | |

SPM-3R

SPM-3R

CCI06

3

3

4

4