THIS COPY IS PROVIDED ON A RESTRICTED BASIS AND IS NOT TO BE USED IN ANY WAY DETRIMENTAL TO THE INTERESTS OF PANDUIT CORP.

NOTES, UNLESS OTHERWISE SPECIFIED:

The CT-810 Hand Operated Mechanical Crimping Tools are designed to crimp:
- Panduit Copper compression connectors to copper code wire
- (B) Panduit copper compression lug families: SCSS,SCS,SCL,SCH,LCAS,LCA,LCD,LCB,LCC
- No separate dies required
- UL Connector sizes #8 through 1/0 AWG

Go to www.panduit.com for additional information.

The CT-810 Tool includes:

QTY	ITEM DESCRIPTION
1	CT-810 MANUAL CRIMPING TOOL
1	CARDBOARD SHIPPING BOX
1	USER INSTRUCTION MANUAL

Technical information

WEIGHT	2.8 LBS [1.25 kg]
LENGTH	15.71" [399 mm]
WIDTH	6.31" [160 mm]
HEIGTH	1.38" [35 mm]

Copy of the operator manual can be found at www.panduit.com

Dimensions in [brackets] are in metric. All dimensions are for reference only.

(A) Tool is RoHS compliant per European Directive 2002/95/EC on the Restriction of Hazardous Substances (RoHS)

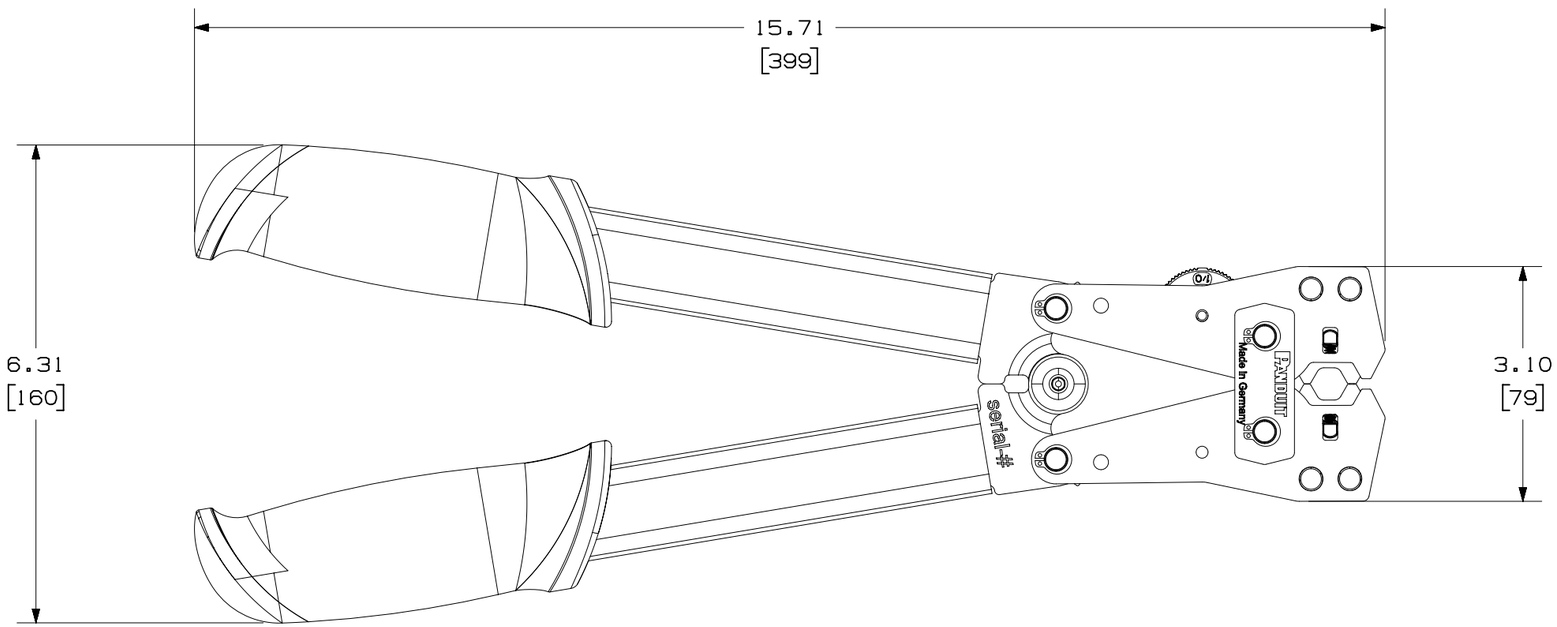

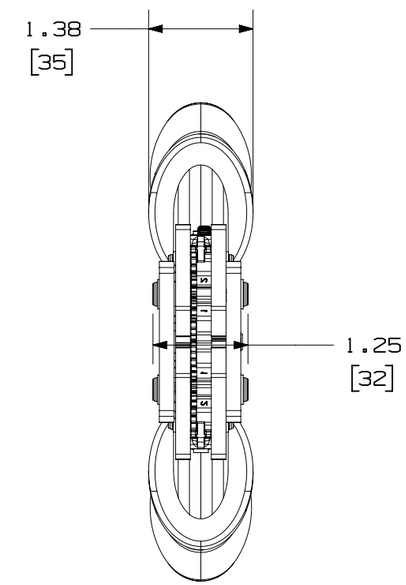

REV	DATE	BY	CHK	APR	DESCRIPTION	ECN
02	12/6/24	ALP	ACC	JSUN	(B) ADDED COPPER COMPRESS LUG FAMILIES TO NOTES	008672
01	3/1/21	RUMO	BJP	ALP	(A) ADDED RoHS NOTE	098562
00	4/29/20	RUMO	ACC	RGB	INITIAL RELEASE	077203

TITLE

CT-810 MANUAL CRIMPING TOOL

CUSTOMER DRAWING

ITEM REVISION NAME: 00626NAA/02

DATASET FILE NAME: 00626NAA_DC/02

PANDUIT

UNLESS OTHERWISE SPECIFIED, DIMENSIONAL TOLERANCES ARE: IN [mm]

.X ± .1 [2.54] .XXX ± .005 [.127]
.XX ± .01 [.25] ANGLES ± 5 °

THIRD ANGLE PROJECTION

MATERIAL: MULTIPLE MATERIALS

DRAWING NUMBER: 00626NAA_DC

DRAWN BY	DATE	CHK	SCALE		SIZE
RUMO	4/29/20	ACC	RGB	SHT 1 OF 1	B

D10100DB/17