Product Specification Sheet

CAAG4H662EG

UPC:	78461000264
UNSPSC:	31162502
Standard Qty:	10
Master Carton Qty:	10
Country of Origin:	USA

4 Hole 6-5/8" Adjustable Gusset Corner Angle, Zinc Plated

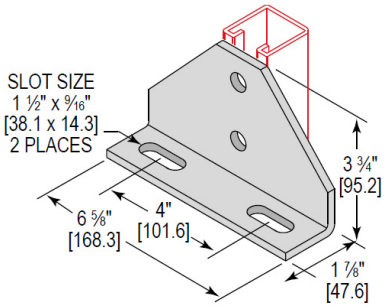

Product Attributes

Brand Name	Minerallac
Sub Brand	Strut Fittings
Type	Angular Fitting
Material	Carbon Steel
Height	3-1/2"
Width	3-1/2"
Depth	2-1/4"
Finish	Electro-galvanized
Number of Holes	2 (9/16") 2 (9/16" x 1-1/2")
Thickness	1/4"

Compliance Information

Buy America Act Compliant:	Yes
Buy American Act Compliant:	Yes
RoHS Compliant:	Yes
UL Compliant:	
UL Code:	

Proposition 65

WARNING: This product can expose you to Lead, which is known to the State of California to cause cancer and reproductive harm. For more information go to www.P65Warnings.ca.gov.

Minerallac Company

Tel: 800-927-3293
Fax: 800-824-8942
www.minerallac.com

WARRANTY DISCLAIMER The information, data and recommendations contained herein may not be all inclusive or specific to your situation, and should only be used as a guide. The information is furnished upon the condition that the person receiving it shall make his/her own determination of the suitability of the product for his/her particular use and on condition that they assume the risk of the use thereof.
With respect to this publication and the product related thereto, except otherwise expressly provided by Manufacturer in writing, MANUFACTURER MAKES NO EXPRESS OR IMPLIED WARRANTY OF MERCHANTABILITY, FITNESS FOR A PARTICULAR PURPOSE OR ANY OTHER EXPRESS OR IMPLIED WARRANTY.
Remedy/Liability Limits The exclusive remedy for losses or damages resulting from this publication or the related product (including claims based on contract, negligence, strict liability or other legal theories) shall be limited to, at Manufacturer's sole election, one of the following: 1. Refund of purchase price paid by buyer or user for product bought, or 2. Replacement of amount of product used.
Manufacturer shall not be liable for losses or damages resulting from use of this publication or handling or use of this product, IN NO CASE SHALL MANUFACTURER BE LIABLE FOR CONSEQUENTIAL OR INCIDENTAL DAMAGES OR LOSSES, INCLUDING WITHOUT LIMIT, HEALTH RELATED DAMAGES OR INJURIES, OR LOST PROFITS.
The terms of this Warranty Disclaimer and Remedy/Liability Limits cannot be varied by any written or verbal statements or agreements. No employee or sales agent of Manufacturer or the seller is authorized to vary or exceed the terms of this Warranty Disclaimer or Limitation of Remedies in any manner.