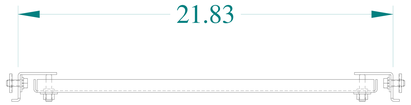

TOP VIEW

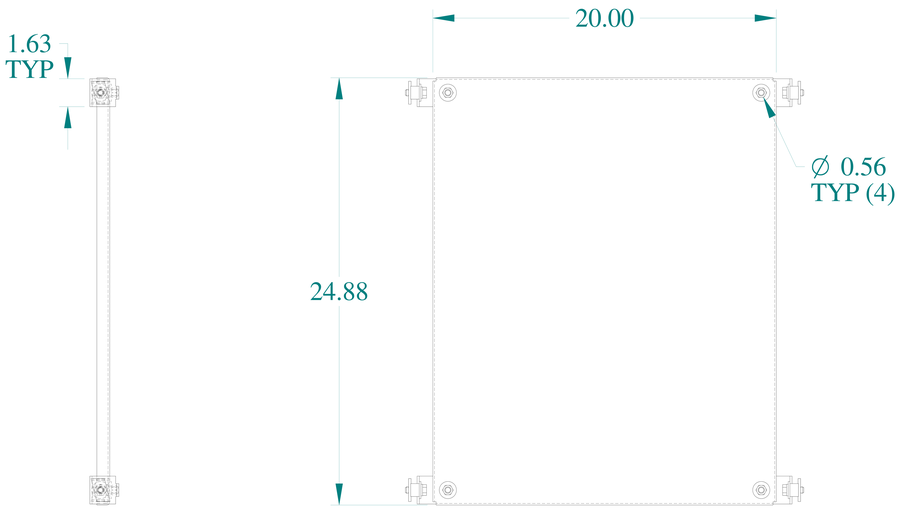

SIDE VIEW

FRONT VIEW

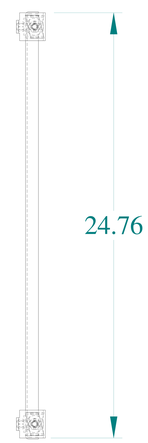

SIDE VIEW

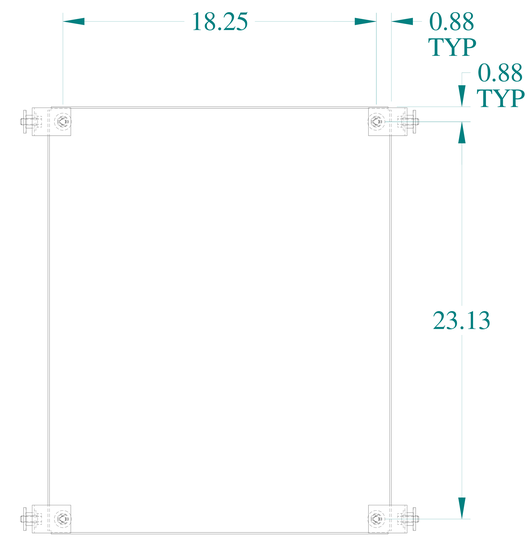

BACK VIEW

BOTTOM VIEW

ISOMETRIC VIEWS

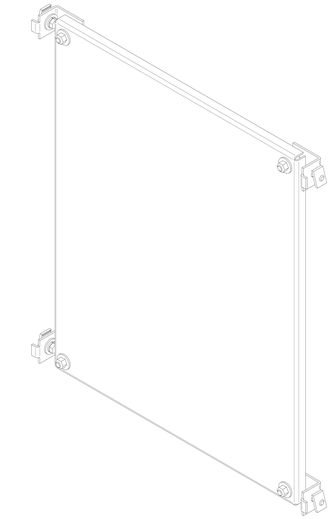

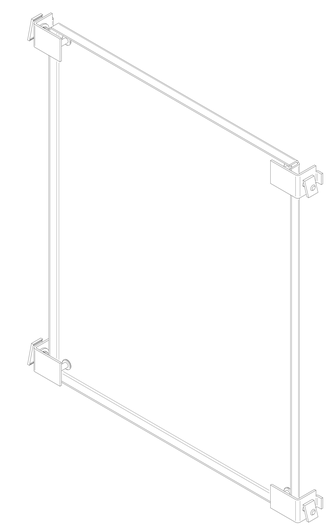

HAMMOND MANUFACTURING®

www.hammondmfg.com

Data subject to change without notice.

Part # : 60TWHW	Date : Feb 10, 2020

Link:www.hammfg.com/60TWHW