THIS COPY IS PROVIDED ON A RESTRICTED BASIS AND IS NOT TO BE USED IN ANY WAY DETRIMENTAL TO THE INTERESTS OF PANDUIT CORP.

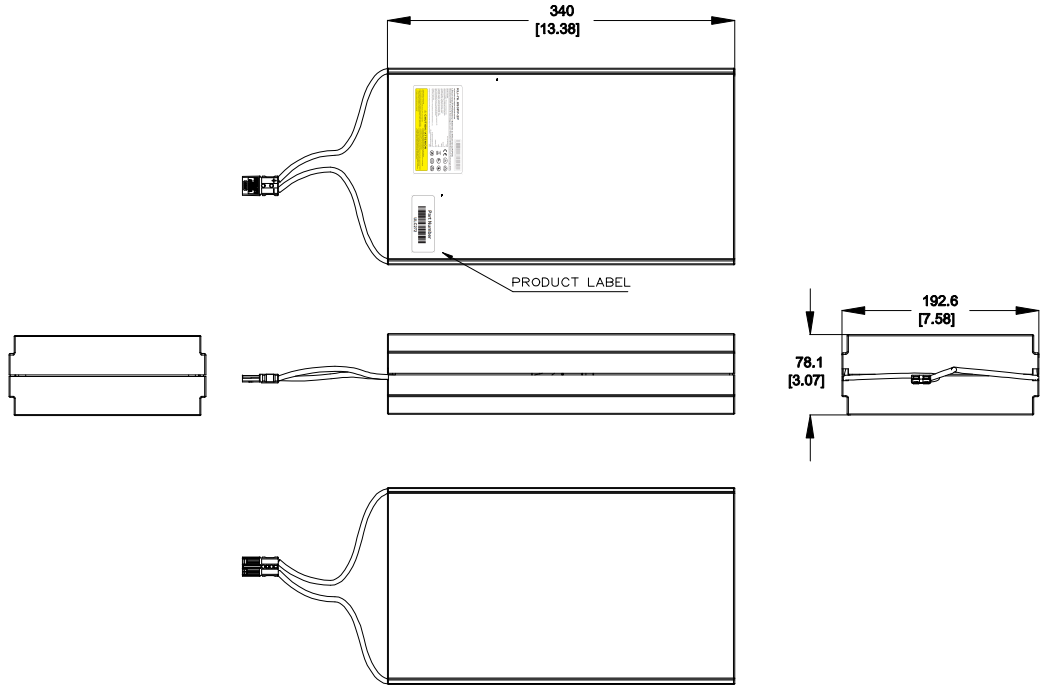

1. STANDARD:

USE WITH UPS CAPACITY:	LFP LITHIUM REPLACEMENT BATTERY CARTRIDGE FOR 2KVA UPS ONLY
BATTERY TYPE:	LFP LITHIUM ION BATTERY
NOMINAL INPUT/OUTPUT VOLTAGE:	72VDC
BREAKER TYPE:	N/A

2. ADDITIONAL:
   NONE
3. ACCESSORY COMPONENTS:
   NONE

NOTES:
1. PRIMARY DIMENSIONS ARE IN MILLIMETERS. SECONDARY DIMENSIONS ARE IN INCHES
2. INSTALLATION SHALL COMPLY WITH ALL APPLICABLE NATIONAL, STATE, AND LOCAL CODES.
3. VISIT OUR ON-LINE CATALOG AT WWW.PANDUIT.COM FOR A CURRENT LIST OF PRODUCTS APPLICABLE FOR USE WITH THIS PART
4. ALL PURCHASED ITEMS CONFORM TO C2-0834 PANDUIT SPECIFICATION FOR CHEMICAL SUBSTANCES TO BE CONTROLLED IN PRODUCT AND PACKAGING

IDENTIFICATION:

PART NUMBER	DESCRIPTION	SHIPPING WEIGHT (KG)
ULC272	72V 6AH LFP LITHIUM REPLACEMENT BATTERY CARTRIDGE *2GROUPS PARALLEL CONNECTION FOR 2KVA EMEA UPS ONLY	6

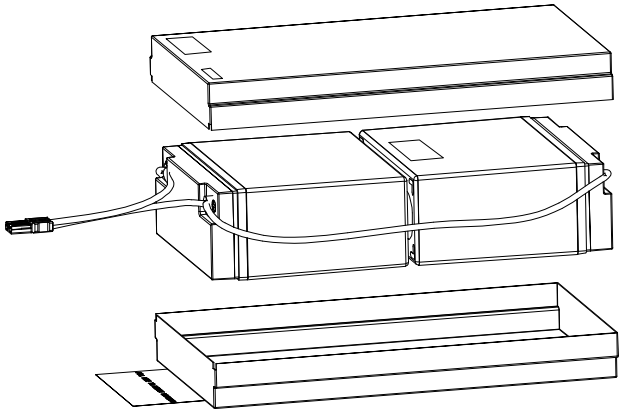

X 1

REV	DATE	BY	CHK	APR	DESCRIPTION	ECN
02A	04/23/2026			CANN/MRWA	SZ REMOVED	
01A	08/22/2022	DJL	ZRZ	GLM/DJB	UPDATED DESCRIPTION	ULC272
00A	03/10/2022	DJL	ZRZ	GLM/DJB	RELEASE TO PRODUCTION	ULC272

TITLE: UPS LI BATTERY CARTRIDGE ULC272
CUSTOMER DRAWING

ITEM REVISION NAME: ULC272/02
DRAWING FILE NAME: ULC272-DC/02A

UNLESS OTHERWISE SPECIFIED, DIMENSIONAL TOLERANCES ARE: MM [IN]

THIRD ANGLE PROJECTION

DRAWN BY: DJL | DATE: 08/17/2021 | CHK: MJD | SCALE: VARIOUS

MATERIAL: N/A

DRAWING NUMBER: ULC272-DC

SHT 1 OF 2 | SIZE: D

PANDUIT

D1TFD0DD/1B

THIS COPY IS PROVIDED ON A RESTRICTED BASIS AND IS NOT TO BE USED IN ANY WAY DETRIMENTAL TO THE INTERESTS OF PANDUIT CORP.

72V LFP LITHIUM REPLACEMENT BATTERY CARTRIDGE

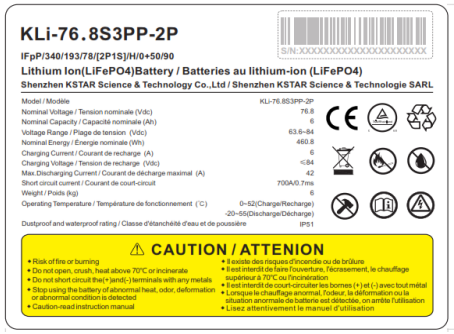

KLi-76.8S3PP-2P

S/N:XXXXXXXXXXXXXXXXXXXX

IFpP/340/193/78/[2P1S]/H/0+50/90

Lithium Ion(LiFePO4)Battery / Batteries au lithium-ion (LiFePO4)

Shenzhen KSTAR Science & Technology Co.,Ltd / Shenzhen KSTAR Science & Technologie SARL

Model / Modèle	KLi-76.8S3PP-2P
Nominal Voltage / Tension nominale (Vdc)	76.8
Nominal Capacity / Capacité nominale (Ah)	6
Voltage Range / Plage de tension (Vdc)	63.6~84
Nominal Energy / Énergie nominale (Wh)	460.8
Charging Current / Courant de recharge (A)	6
Charging Voltage / Tension de recharge (Vdc)	≤84
Max.Discharging Current / Courant de décharge maximal (A)	42
Short circuit current / Courant de court-circuit	700A/0.7ms
Weight / Poids (kg)	6
Operating Temperature / Température de fonctionnement (℃)	0~52(Charge/Recharge) -20~55(Discharge/Décharge)
Dustproof and waterproof rating / Classe d'étanchéité d'eau et de poussière	IP51

⚠ CAUTION / ATTENION

- Risk of fire or burning
- Do not open, crush, heat above 70℃ or incinerate
- Do not short circuit the(+)and(-)terminals with any metals
- Stop using the battery if abnormal heat, odor, deformation or abnormal condition is detected
- Caution-read instruction manual
- Il existe des risques d'incendie ou de brûlure
- Il est interdit de faire l'ouverture, l'écrasement, le chauffage supérieur à 70℃ ou l'incinération
- Il est interdit de court-circuiter les bornes (+) et (-) avec tout métal
- Lorsque le chauffage anormal, l'odeur, la déformation ou la situation anormale de batterie est détectée, on arrête l'utilisation
- Lisez attentivement le manuel d'utilisation

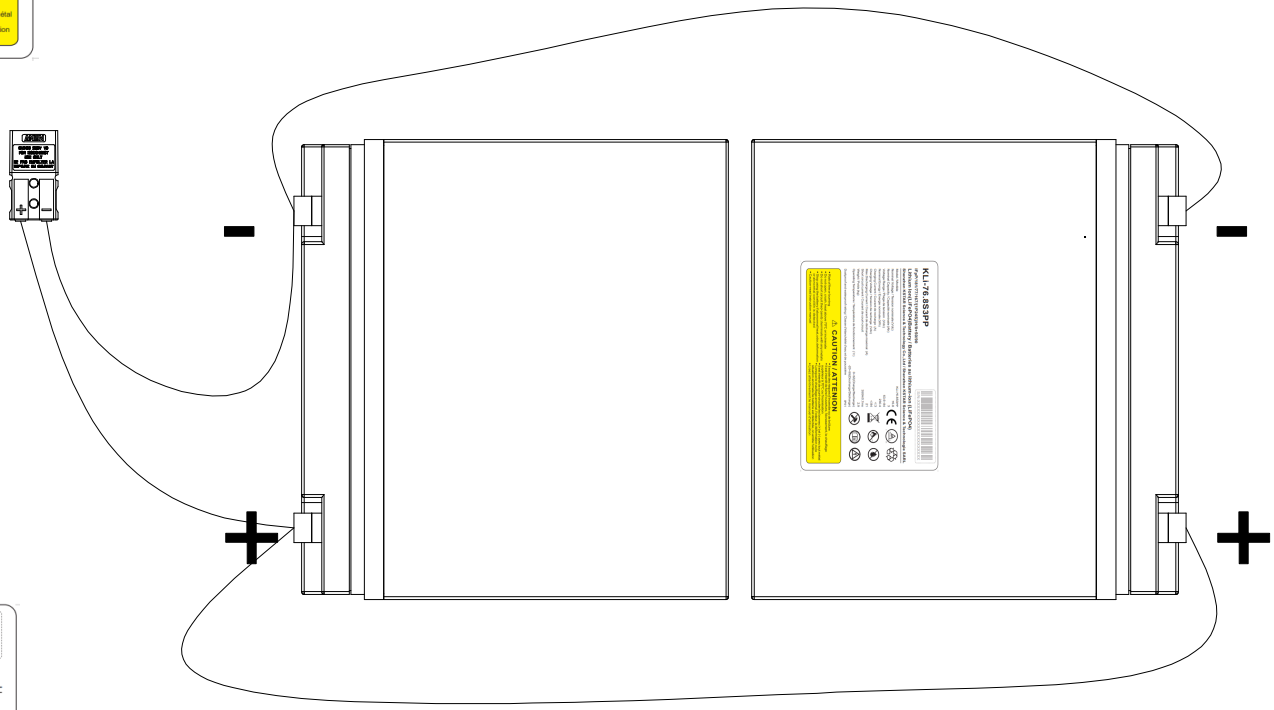

KLi-76.8S3PP

S/N:XXXXXXXXXXXXXXXXXXXX

IFpP/181/77/167/[1P24S]/H/0+50/90

Lithium Ion(LiFePO4)Battery / Batteries au lithium-ion (LiFePO4)

Shenzhen KSTAR Science & Technology Co.,Ltd / Shenzhen KSTAR Science & Technologie SARL

Model / Modèle	KLi-76.8S3PP
Nominal Voltage / Tension nominale (Vdc)	76.8
Nominal Capacity / Capacité nominale (Ah)	3
Voltage Range / Plage de tension (Vdc)	63.6~84
Nominal Energy / Énergie nominale (Wh)	230.4
Charging Current / Courant de recharge (A)	≤3
Charging Voltage / Tension de recharge (Vdc)	≤84
Max.Discharging Current / Courant de décharge maximal (A)	21
Short circuit current / Courant de court-circuit	350A/0.7ms
Weight / Poids (kg)	2.9
Operating Temperature / Température de fonctionnement (℃)	0~52(Charge/Recharge) -20~55(Discharge/Décharge)
Dustproof and waterproof rating / Classe d'étanchéité d'eau et de poussière	IP51

⚠ CAUTION / ATTENION

- Risk of fire or burning
- Do not open, crush, heat above 70℃ or incinerate
- Do not short circuit the(+)and(-)terminals with any metals
- Stop using the battery if abnormal heat,odor,deformation or abnormal conditin is detected
- Caution-read instruction manual
- Il existe des risques d'incendie ou de brûlure
- Il est interdit de faire l'ouverture, l'écrasement, le chauffage supérieur à 70℃ ou l'incinération
- Il est interdit de court-circuiter les bornes (+) et (-) avec tout métal
- Lorsque le chauffage anormal, l'odeur, la déformation ou la situation anormale de batterie est détectée, on arrête l'utilisation
- Lisez attentivement le manuel d'utilisation

RFV	DATE	BY	CHK	APR	DESCRIPTION	ECN
					SEE SHEET 1 FOR CHANGES	

TITLE: UPS LI BATTERY CARTRIDGE ULC272
CUSTOMER DRAWING

ITEM REVISION NAME: ULC272/02
ULC272-DC/02A

UNLESS OTHERWISE SPECIFIED, DIMENSIONAL TOLERANCES ARE: MM [IN]

THIRD ANGLE PROJECTION

DRAWN BY: MJD | DATE: 03/10/2022 | CHK: | SCALE: VARIOUS

MATERIAL: N/A

DRAWING NUMBER: ULC272-DC

SHT 2 OF 2 | SIZE: D

PANDUIT

01010000/18