Blackburn® Compression
Featuring the Color-Keyed® System

CATALOG NO. 54168UF

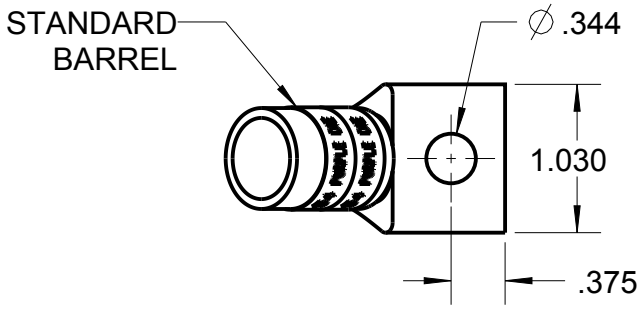

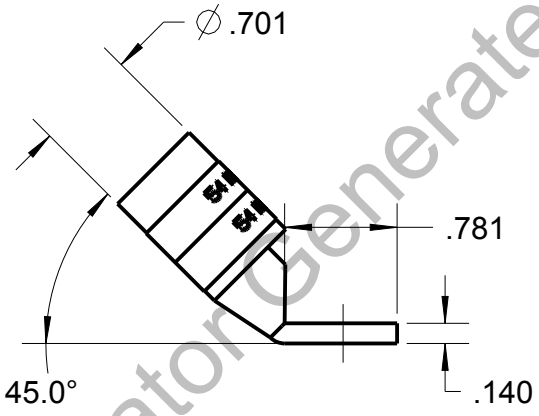

Configurator Generated

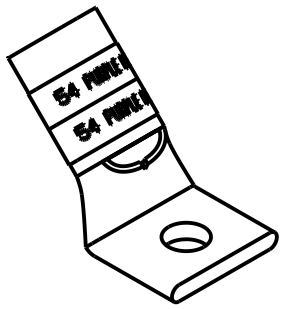

WIRE SIZE: 4/0
MATERIAL: HIGH CONDUCTIVITY COPPER
FINISH: TIN PLATED

GENERAL NOTES

1. ALL DIMENSIONS ARE FOR REFERENCE ONLY.
2. DIMENSIONS IN BRACKETS [ ] ARE IN METRIC UNITS.

REVISIONS

** SEE ERN (****) FOR APPROVAL SIGNATURES & RELEASE DATE. PROJECT NO: ****

Thomas&Betts
www.tnb.com

DESCRIPTION: 1 HOLE LUG

ORIGINAL PROJECT NO / (ERN NO)	SHEET NO:	REV. NO:	DRAWING NO:
/ ( )	1 OF 1	A	WSD-003333

THIS DRAWING IS INTENDED FOR DESCRIPTIVE PURPOSES ONLY. AND THE RIGHT IS RESERVED TO DEVIATE FROM ANY OF THE DETAILS SHOWN HEREON.
C 2005 Thomas & Betts - Proprietary, All Rights Reserved