Blackburn Compression
Featuring the Color-Keyed® System

CATALOG NO. 54265UF

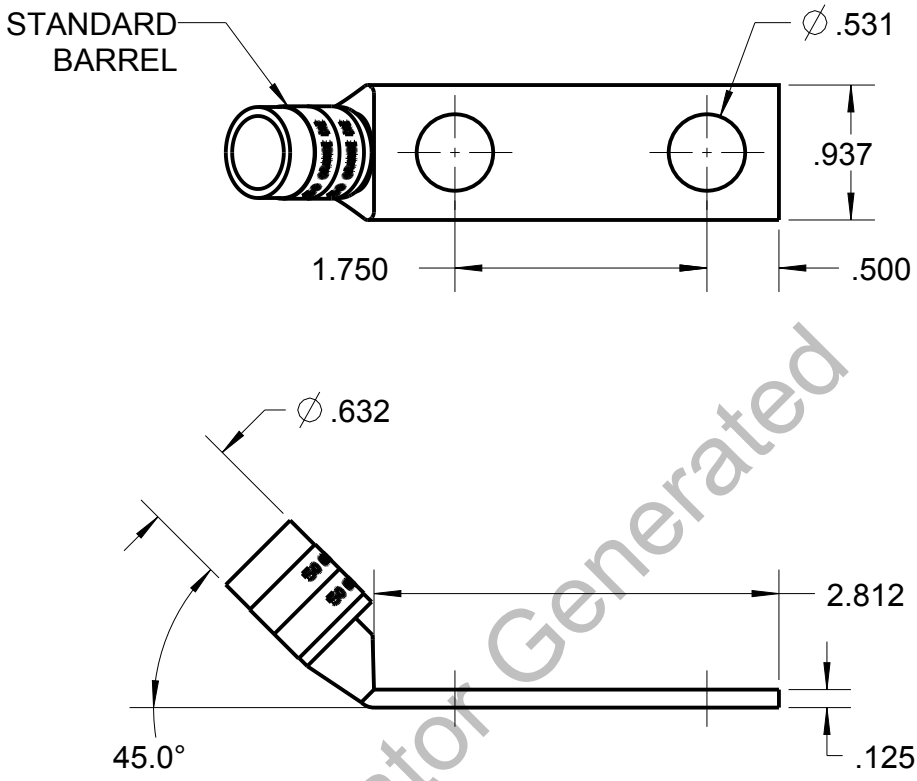

Configurator Generated

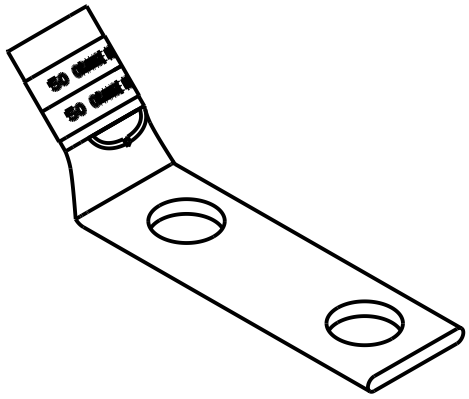

WIRE SIZE: 3/0
MATERIAL: HIGH CONDUCTIVITY COPPER
FINISH: TIN PLATED

GENERAL NOTES				
1. ALL DIMENSIONS ARE FOR REFERENCE ONLY. 2. DIMENSIONS IN BRACKETS [ ] ARE IN METRIC UNITS.	Thomas&Betts www.tnb.com			
REVISIONS	DESCRIPTION: 2 HOLE LUG			
** SEE ERN (****) FOR APPROVAL SIGNATURES & RELEASE DATE. PROJECT NO: ****	ORIGINAL PROJECT NO / (ERN NO) / ( )	SHEET NO: 1 OF 1	REV. NO: 0	DRAWING NO: WSD-002683 54265UF

THIS DRAWING IS INTENDED FOR DESCRIPTIVE PURPOSES ONLY. AND THE RIGHT IS RESERVED TO DEVIATE FROM ANY OF THE DETAILS SHOWN HEREON.
C 2005 Thomas & Betts - Proprietary, All Rights Reserved